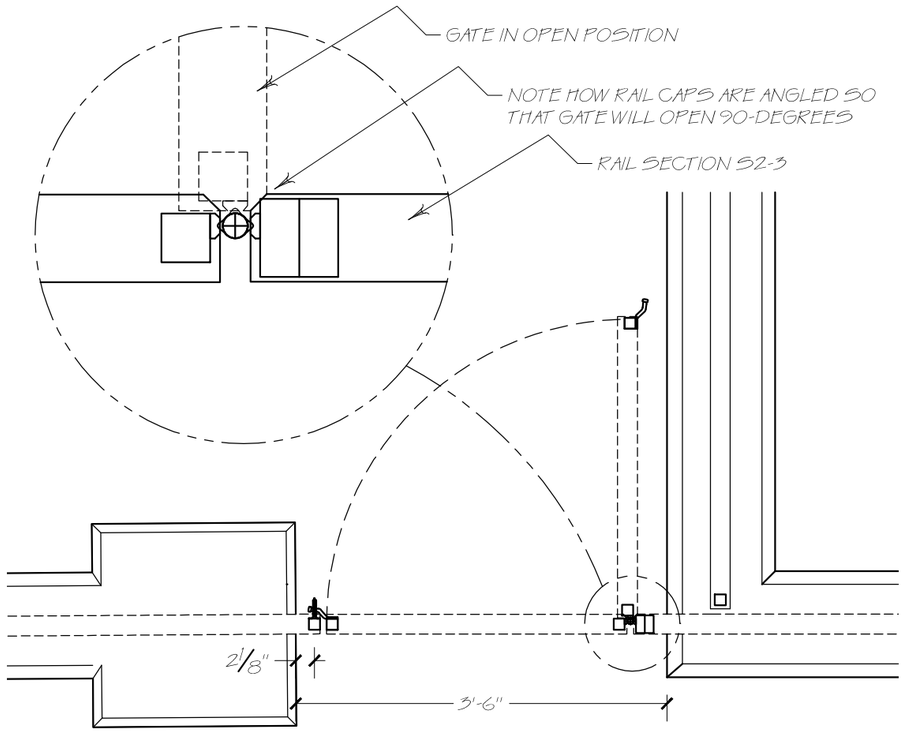

01 GATE SIG - PLAN VIEW
SCALE: 1 1/2" = 1'

S1-25 S2-3

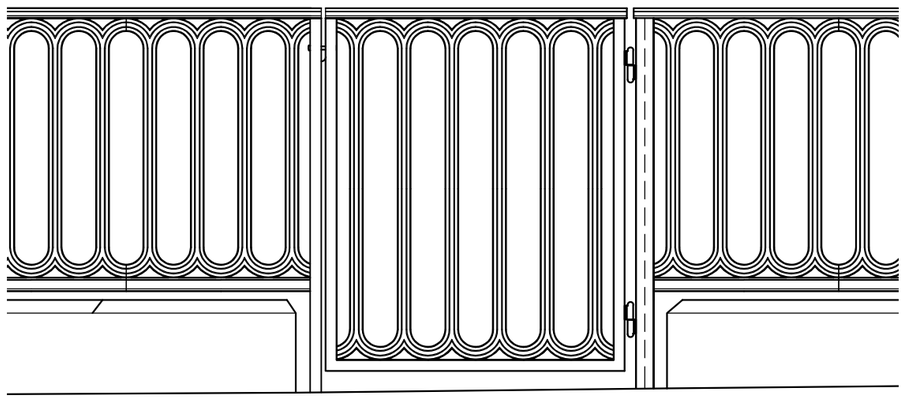

02 GATE SIG - FRONT ELEVATION
SCALE: 1 1/2" = 1'

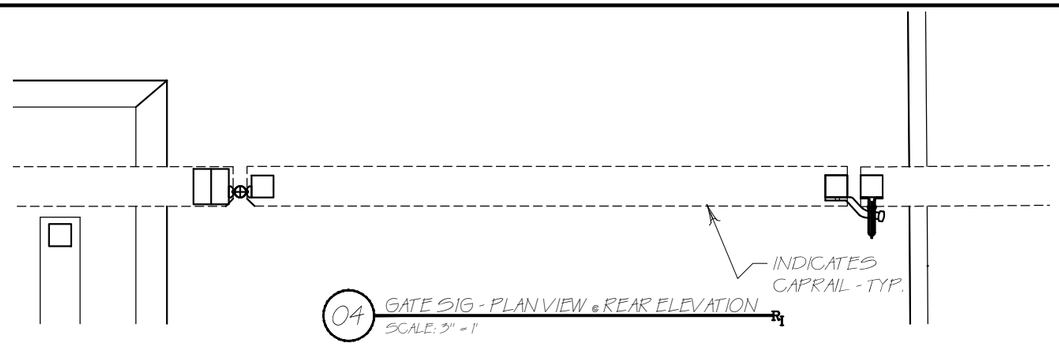

04 GATE SIG - PLAN VIEW & REAR ELEVATION
SCALE: 3" = 1'

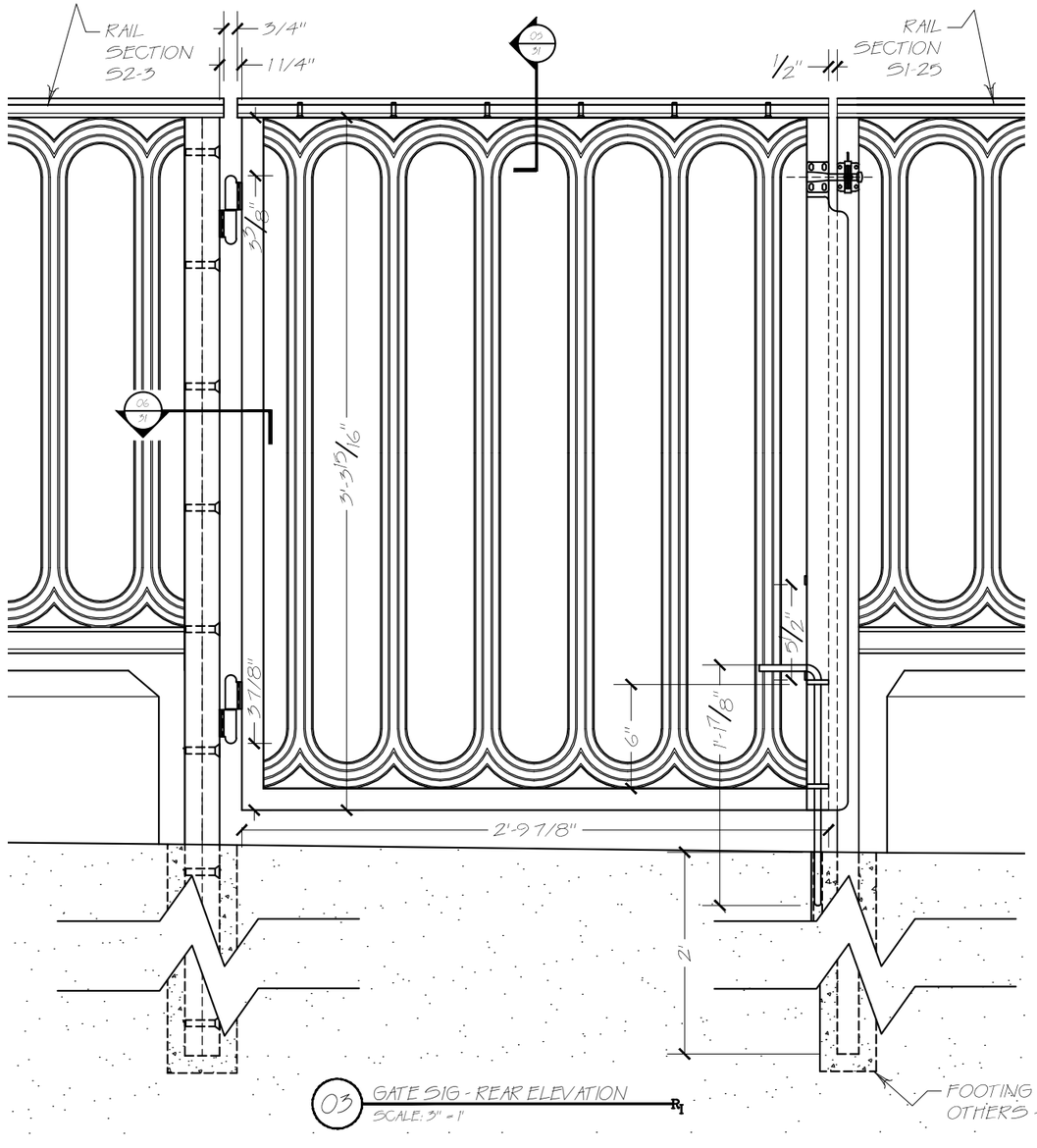

03 GATE SIG - REAR ELEVATION
SCALE: 3" = 1'

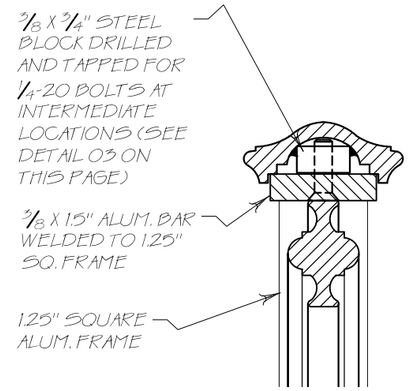

05 GATE SIG - SECTION
SCALE: 1" = 1'

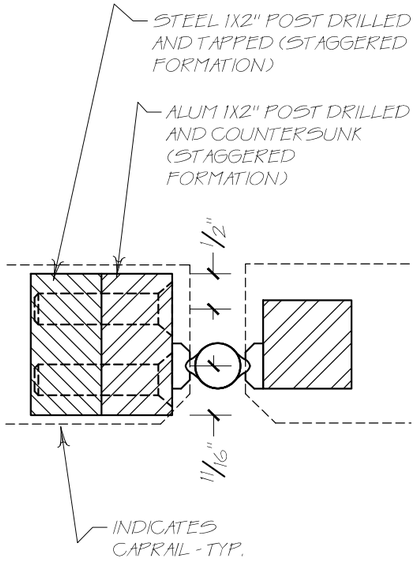

06 GATE SIG - SECTION
SCALE: 1" = 1'

DRAFT
DO NOT SCALE REDUCED SETS
USED FOR PRESENTATION ONLY

Robinson Iron
PHONE: 1-800-824-2157 FAX 1-256-329-8460

TITLE:	JOB SITE:	APPROVED BY:	SCALE:	DRAWN BY:	DATE:	REVISED:	DWG. NO:	JOB NO:
Custom Fencing / Gates *S1G Gate*	*City of Madison Town Park* *Madison, Georgia*		*As Noted*	*WLL* F.C. BY:	*05-13-09*	07/10/09 08/12/09	*1453-31*	*6047*