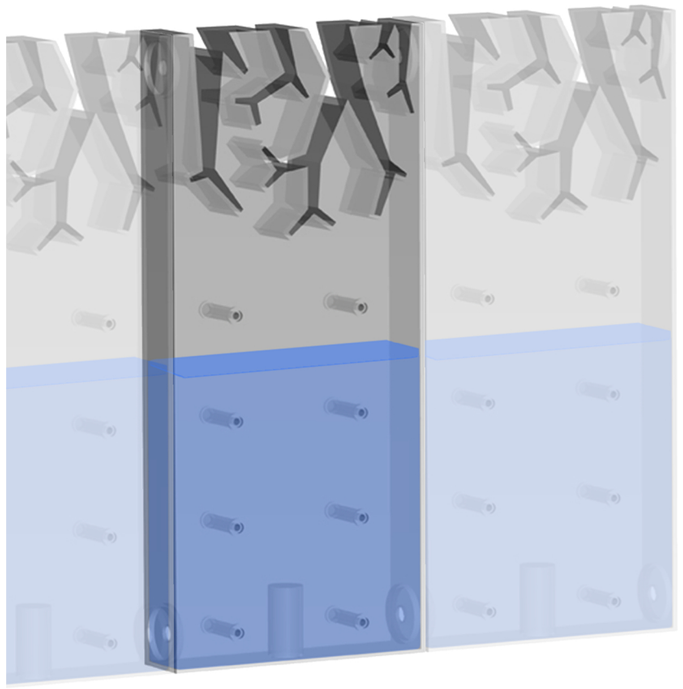

Roof top water is gravity feed down into an initial section, where it will then evenly flows to the others.

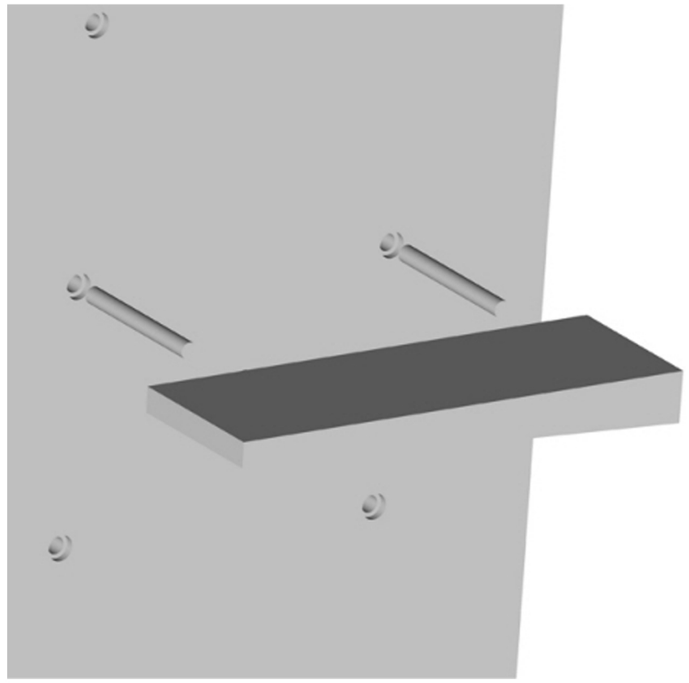

Customizable shelves can be placed horizontally, vertically and diagonally.

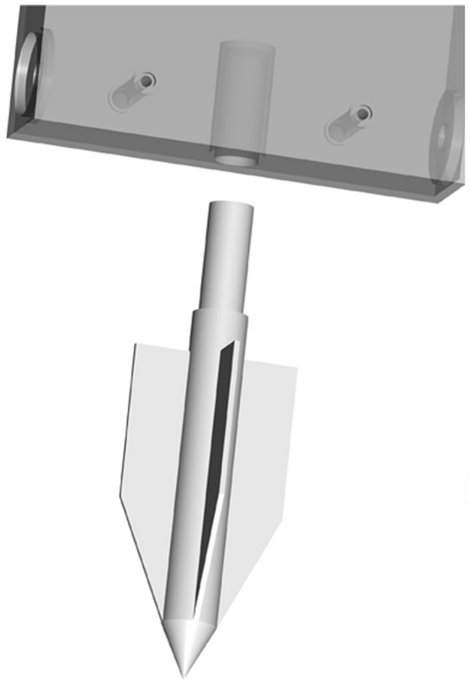

Large sturdy stakes act as firm foundations

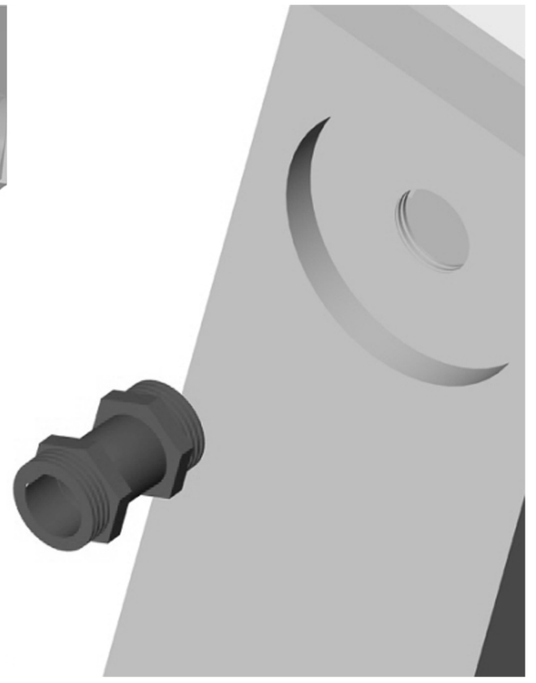

Hollow felxible joints allow water and air flow.