Hampton Inn

Perfect Mix Lobby Detail Drawings

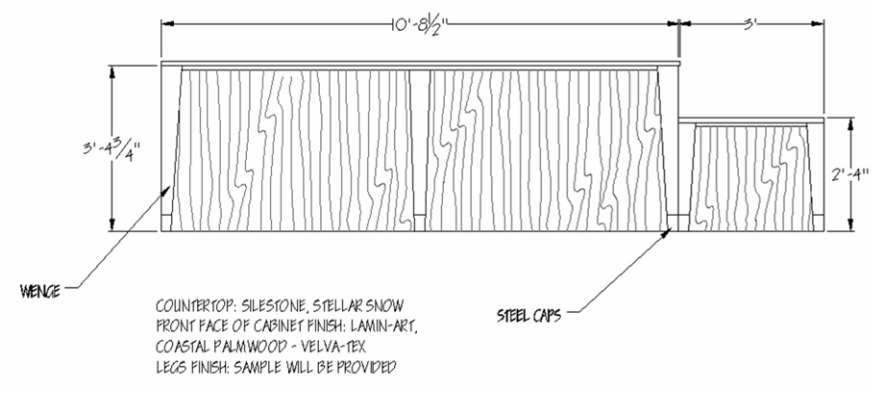

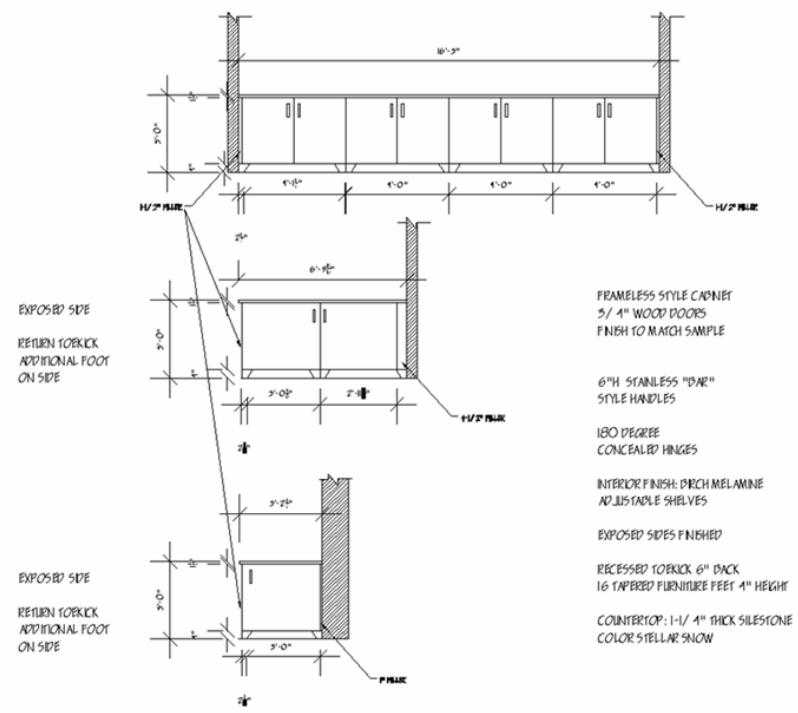

american HOTEL FURNISHINGS
division of American Hotel Register Co.

This design is proprietary to American Hotel Register Company's Furnishings Division.