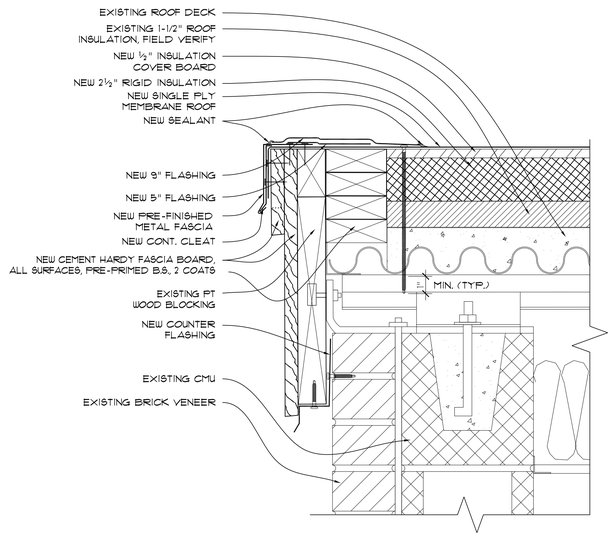

1 - EAVE DETAIL
Scale: 3" = 1'-0"

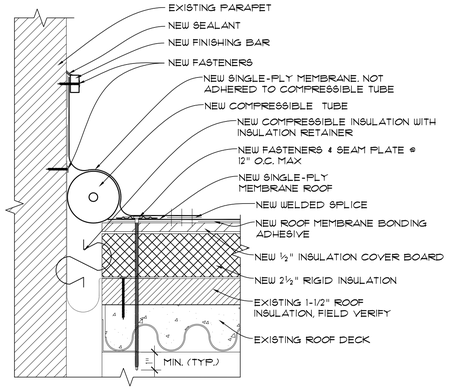

5 - EXPANSION JOINT
Scale: 3" = 1'-0"

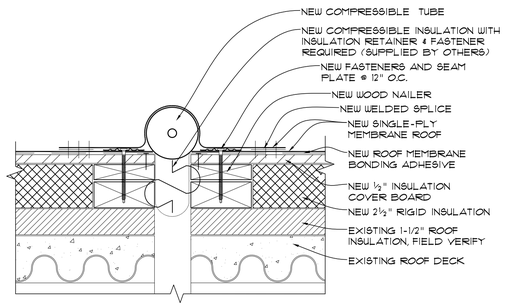

6 - EXPANSION JOINT (TYP.)
Scale: 3" = 1'-0"

LEGEND

— — LIMIT OF WORK

NEW SINGLE PLY MEMBRANE ROOF

ADDITIVE ALTERNATE #1

AS A PART OF THIS ALTERNATE, THE THICKNESS OF THE ROOF MEMBRANE SPECIFIED IN SECTION 07 53 23 SHALL CHANGE FROM 60 MILS TO 90 MILS. THE WARRANTY PERIOD SHALL CHANGE FROM 20 YEARS TO 30 YEARS. THE BATTEN THICKNESS SHALL CHANGE TO 90 MILS. THE SCOPE OF THIS ALTERNATE SHALL COVER THE MEMBRANE AS SHOWN ON DRAWING A110.

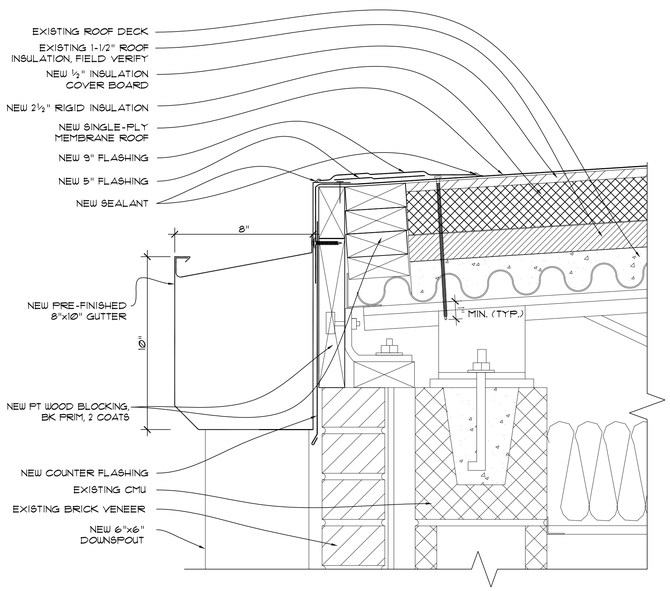

2 - EAVE DETAIL W/GUTTER
Scale: 3" = 1'-0"

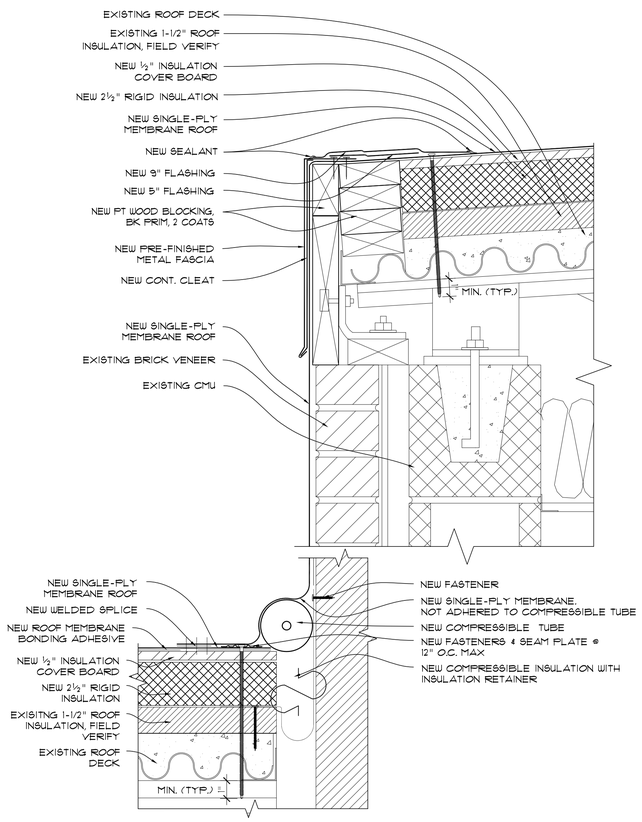

7 - EAVE AND EXPANSION JOINT DETAIL
Scale: 3" = 1'-0"

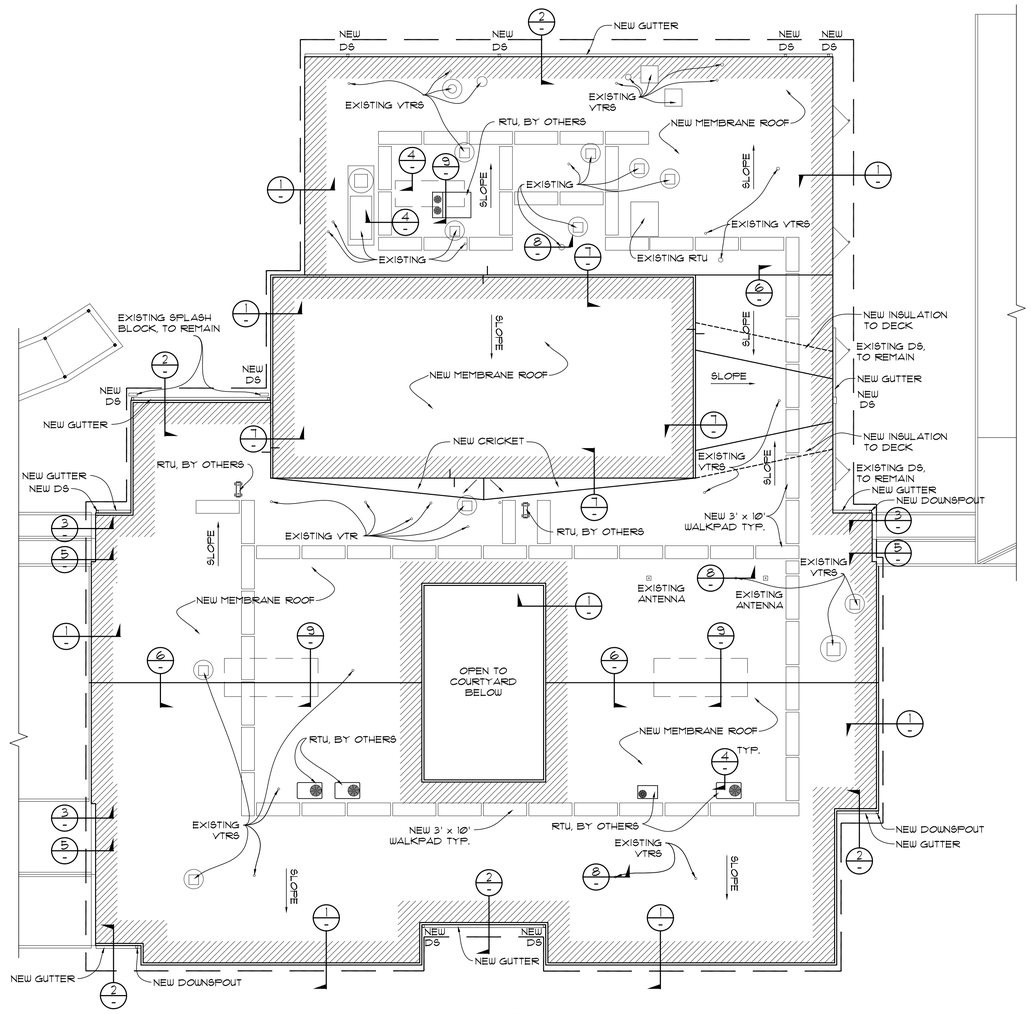

ROOF PLAN
Scale: 1/16" = 1'-0"

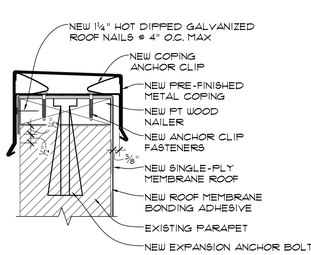

3 - PARAPET DETAIL
Scale: 3" = 1'-0"

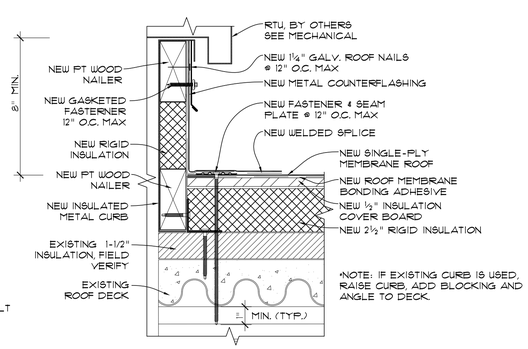

4 - HVAC CURB DETAIL (TYP.)
Scale: 3" = 1'-0"

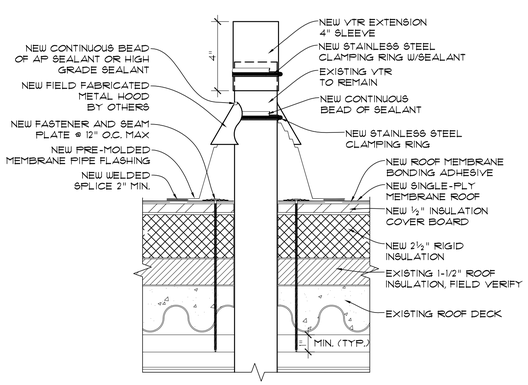

8 - ROOF PENETRATION (TYP.)
Scale: 3" = 1'-0"

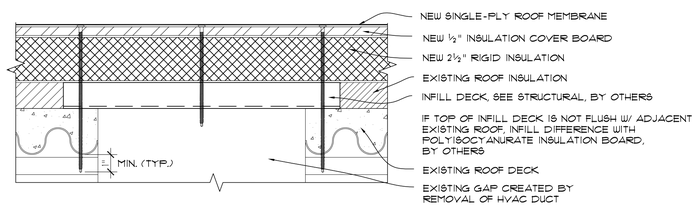

9 - HVAC CURB DETAIL (TYP.)
Scale: 3" = 1'-0"

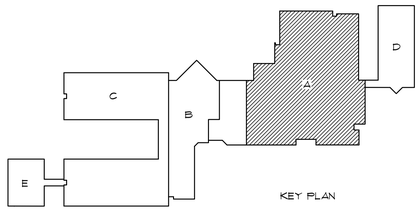

KEY PLAN

N

0 4' 8' 16' 32' 48'
Scale: 1/16" = 1'-0"