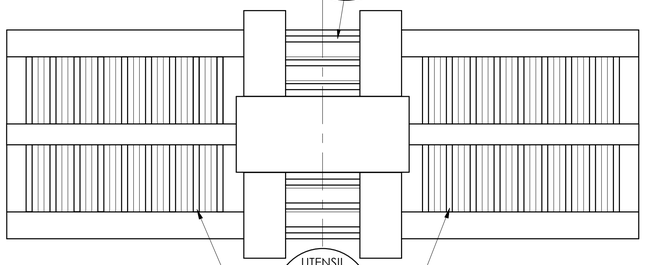

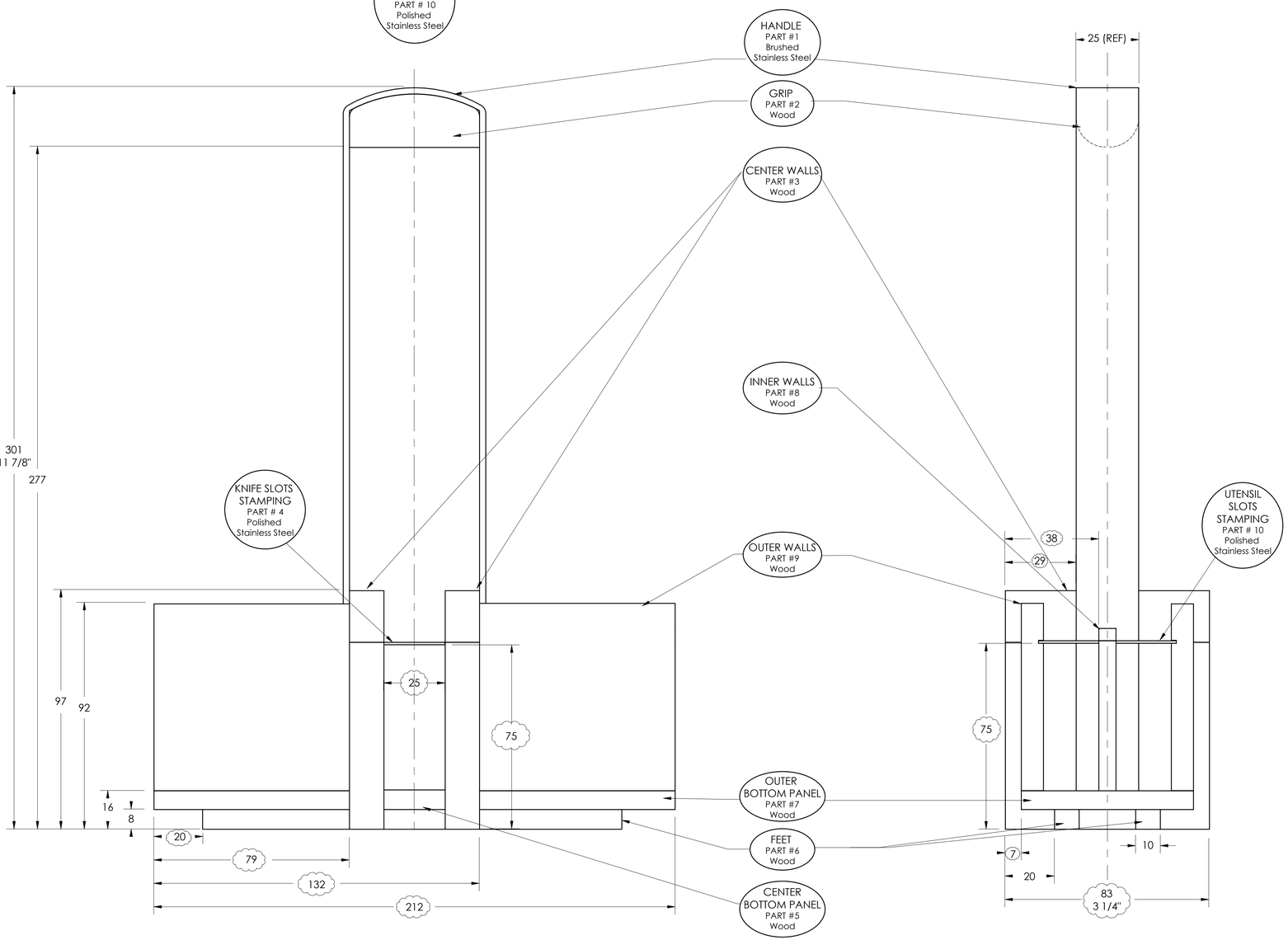

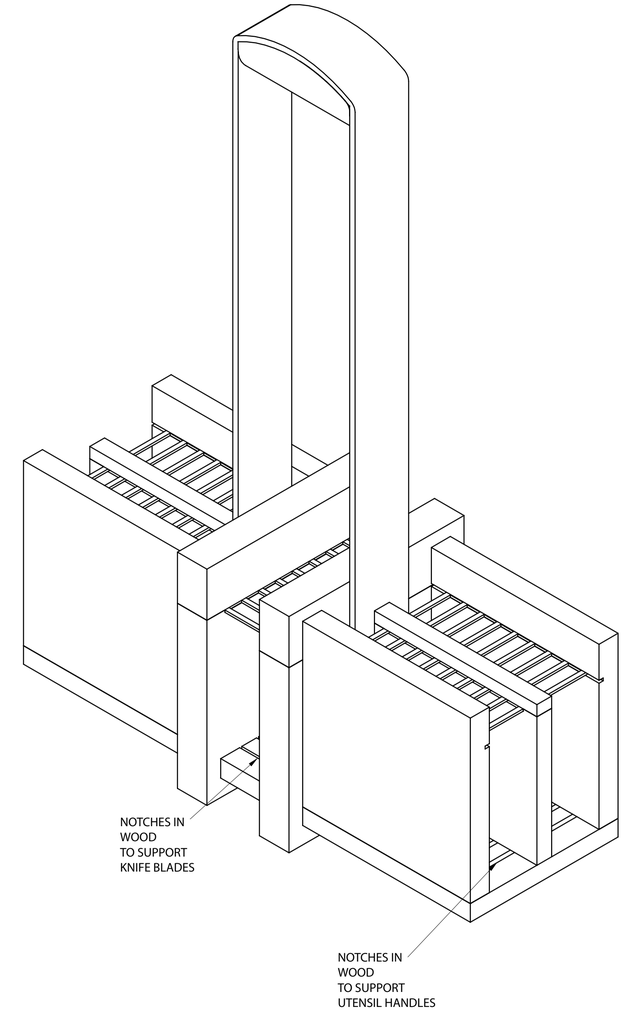

GORHAM	PROGRAM FLATWARE CADDY- REV 8-19-13 ITEM ASSEMBLY MATERIAL WOOD-METAL	DRAWN BY E. MATT SCALE FULL (AS DIMENSIONED IN MM) REVISION REV 8-19-13	PROPERTY OF LENOX CORPORATION	DATE 8.19.13