PRODUCED BY AN AUTODESK EDUCATIONAL PRODUCT

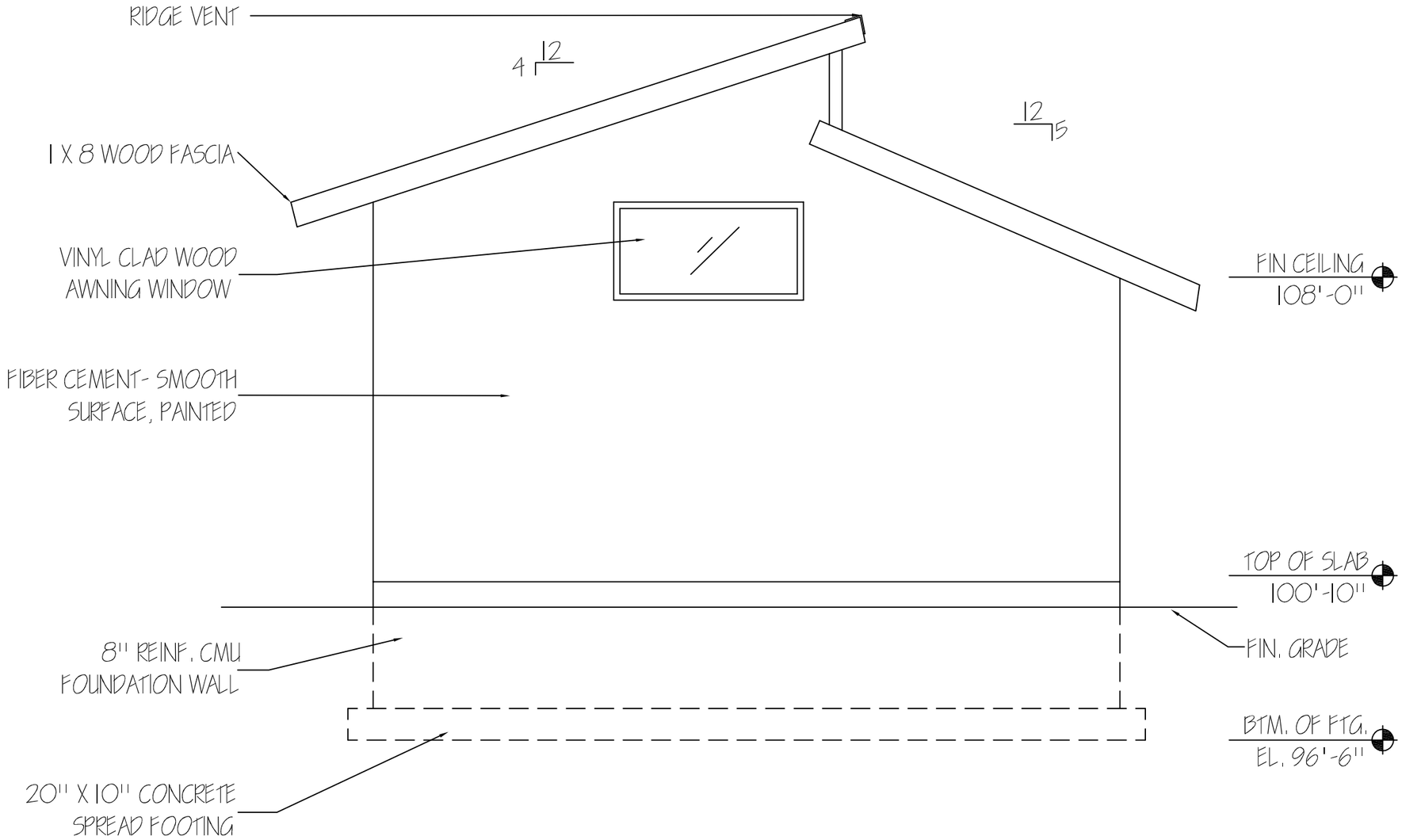

NORTH ELEVATION

SCALE: 1/ 4" = 1'0"

REVISION	NO.	BY	DATE

SHEET: FLOOR PLAN

PROPOSED DESIGN STUDIO

23955 JOAN STREET
SAINT CLAIR SHORES, MI. 48081

DESIGNER:
ERICA LYNN NOWICKI
BAKER COLLEGE OF CLINTON TWP.
MICHIGAN 48035
ACT 203-CONSTRUCTION/ COST ESTIMATING
WINTER 2008

PROJECT NO.
ACT 203

DWG. NO.
6 OF 7

PRODUCED BY AN AUTODESK EDUCATIONAL PRODUCT
PRODUCED BY AN AUTODESK EDUCATIONAL PRODUCT
PRODUCED BY AN AUTODESK EDUCATIONAL PRODUCT