ELECTROSURGICAL UNIT:

SOLID WORKS CONCEPT

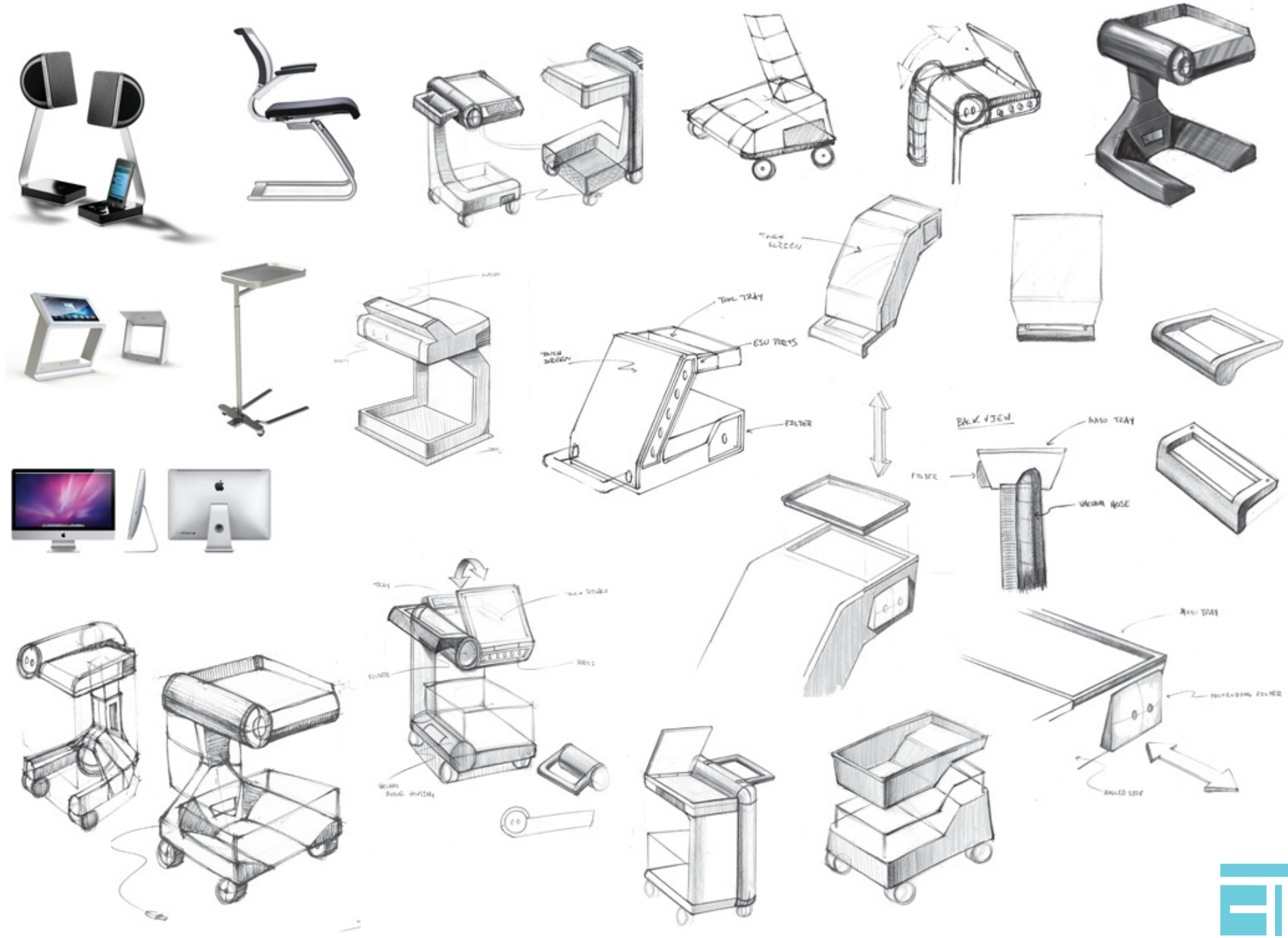

EB DESIGNS