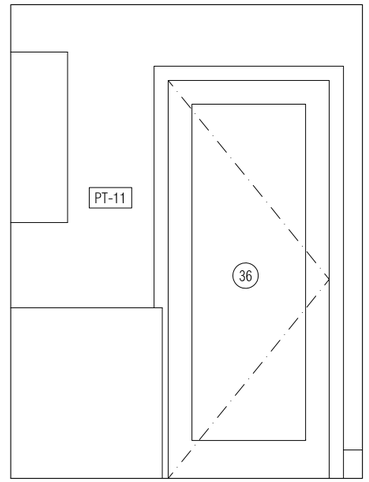

1 MUD/STORAGE ROOM ELEVATION: RM #1115

SCALE: 3/8"=1'-0"

2 MUD/STORAGE ROOM ELEVATION: RM #1115

SCALE: 3/8"=1'-0"

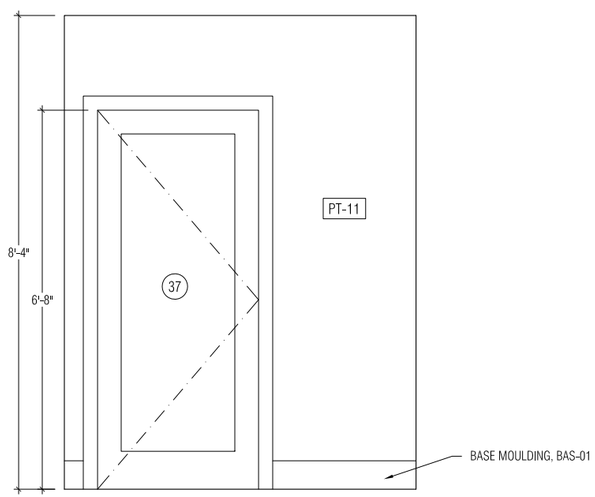

3 MUD/STORAGE ROOM ELEVATION: RM #1115

SCALE: 3/8"=1'-0"

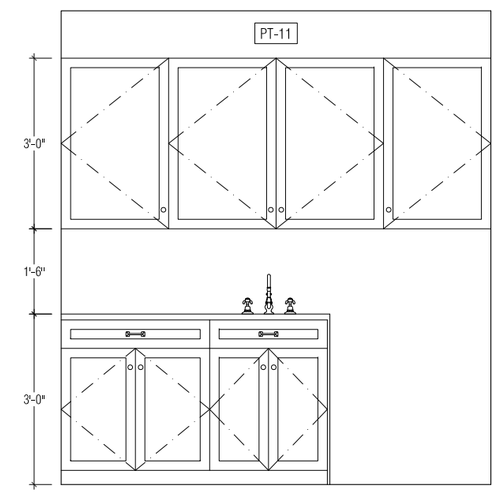

4 MUD/STORAGE ROOM ELEVATION: RM #1115

SCALE: 3/8"=1'-0"

PROJECT	ADDRESS			DESIGN ARCHITECT	

ISSUE			REVISION		
NO.	DATE	DESCRIPTION	NO.	DATE	DESCRIPTION

JOB:
SCALE: AS NOTED
DRAWN BY:
DATE:
TITLE: INT. ELEVATIONS

SHEET NUMBER

A-413.00

XX OF