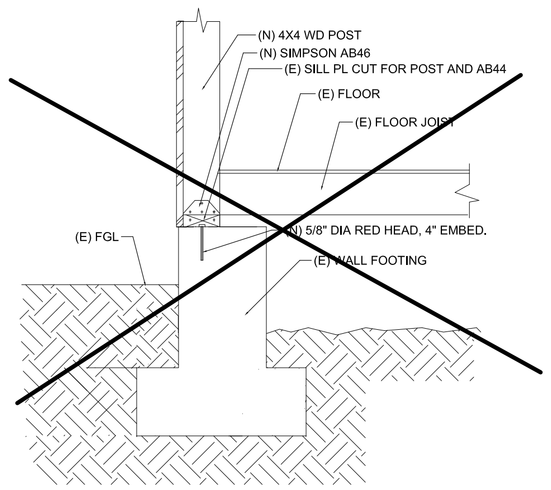

(N) POST TO (E) FTG. 5

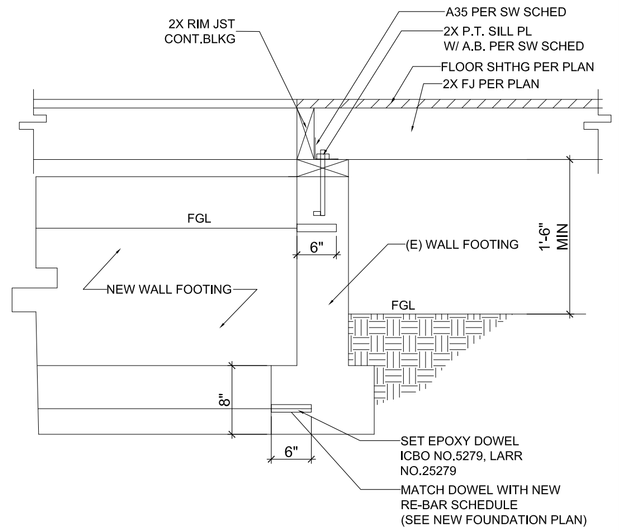

NEW WALL FTG DOWELED TO (E) 4

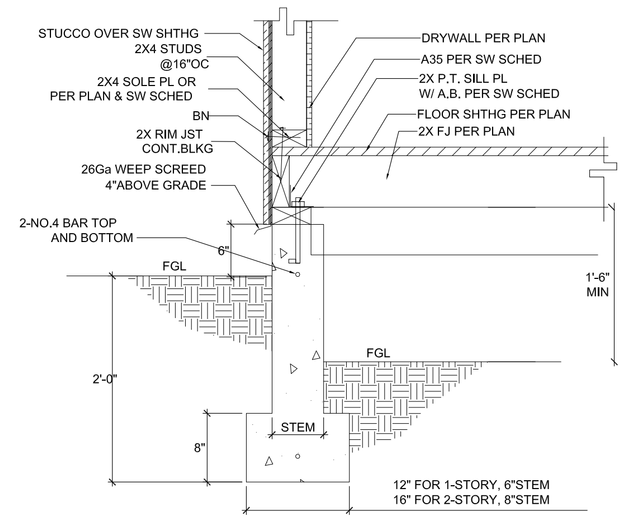

NEW DIAPHRAGM TO (E) 3

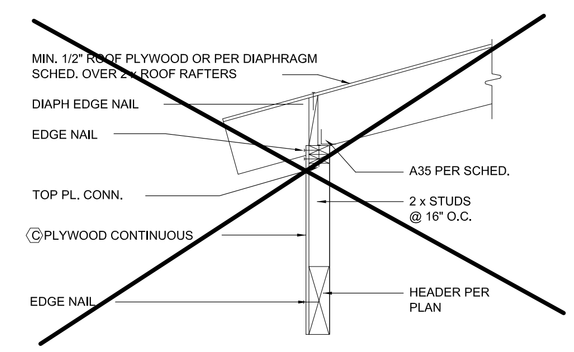

HIGH CEILING EVE DETAIL 2

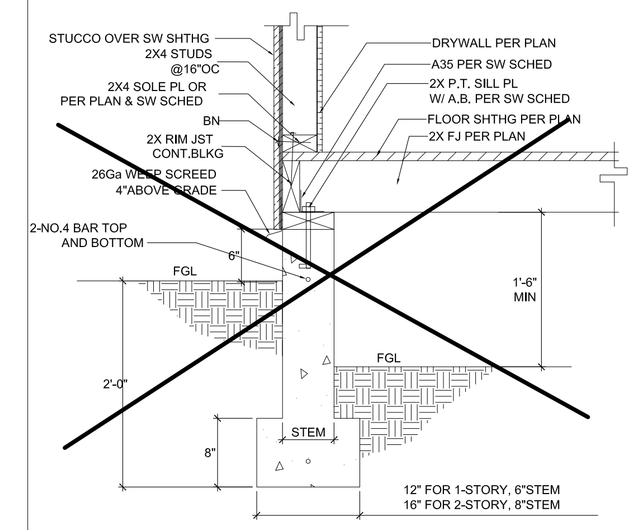

FOUNDATION SHEAR TRANSFER 1

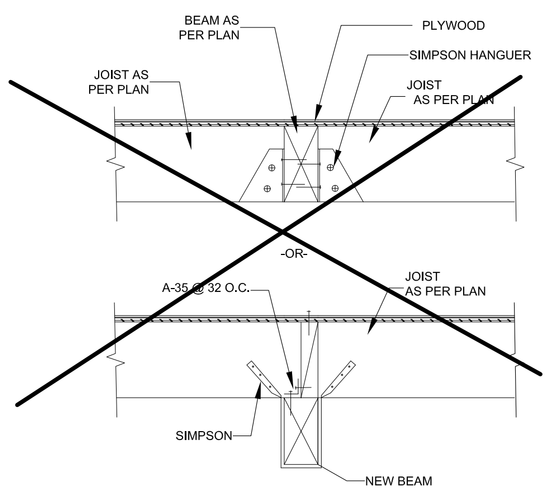

BEAM DETAIL 10

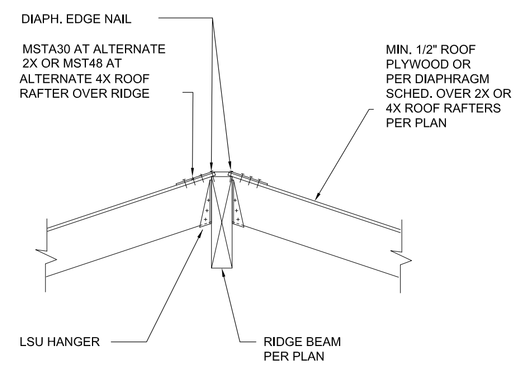

TYPICAL RIDGE TO RAFTER 9

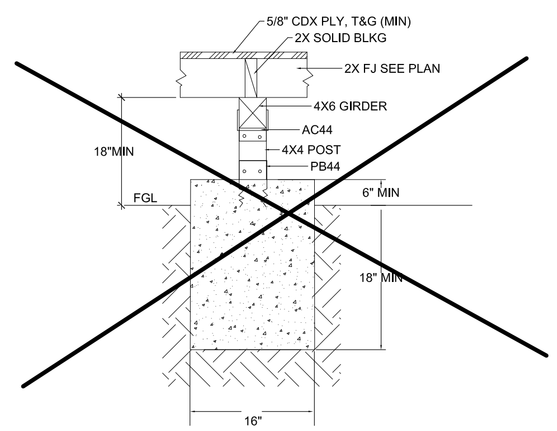

CONCRETE PIER 8

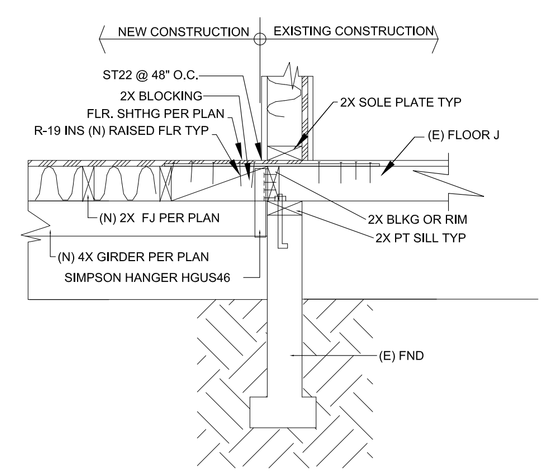

GIRDER HANGER AT (E) FND 7

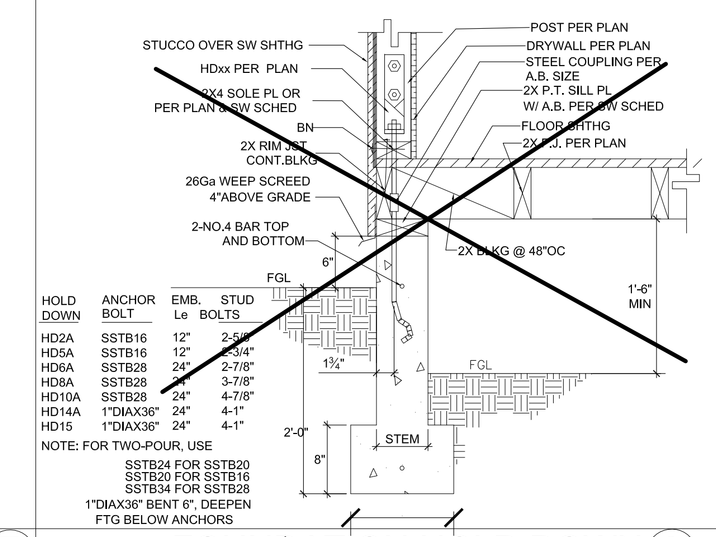

HOLD DOWN	ANCHOR BOLT	EMB. Le	STUD BOLTS
HD2A	SSTB16	12"	2-5/8"
HD5A	SSTB16	12"	2-3/4"
HD6A	SSTB28	24"	2-7/8"
HD8A	SSTB28	24"	3-7/8"
HD10A	SSTB28	24"	4-7/8"
HD14A	1"DIAX36"	24"	4-1"
HD15	1"DIAX36"	24"	4-1"

NOTE: FOR TWO-POUR, USE
SSTB24 FOR SSTB20
SSTB20 FOR SSTB16
SSTB34 FOR SSTB28
1"DIAX36" BENT 6", DEEPEN
FTG BELOW ANCHORS

FOUNDATION HOLD DOWN 6

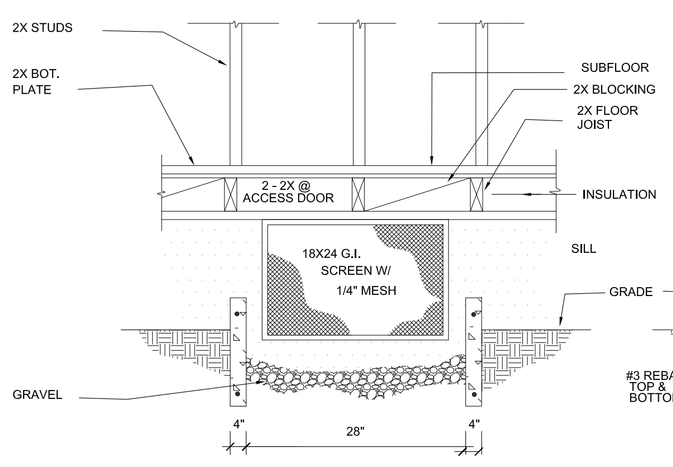

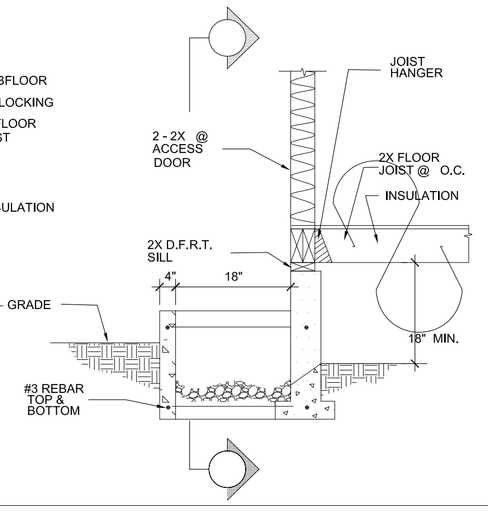

CRAWL HOLE DETAIL 14

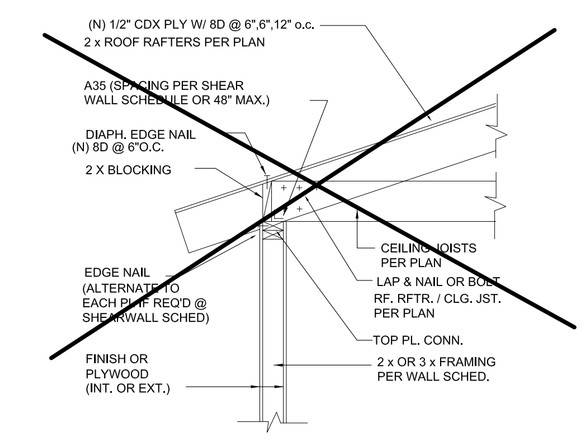

SHEAR TRANSFER 13

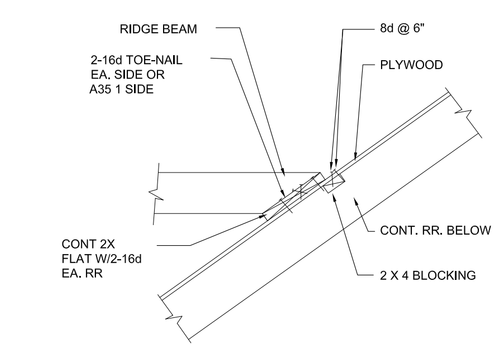

CALIF. FRM. OVER 12

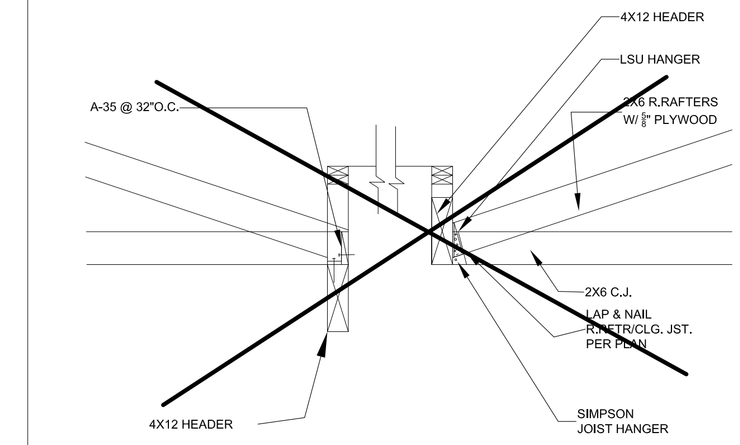

SHEAR TRANSFER/SKYLIGHT 11

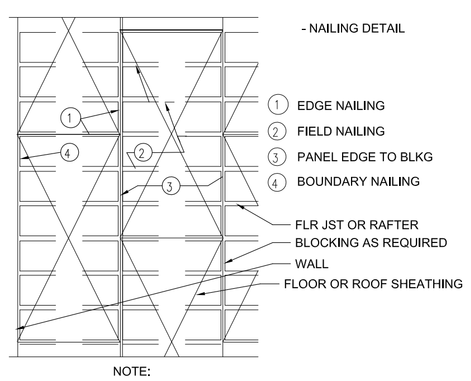

NOTE:
(N)ROOF SHEATHING - 1/2"PW CDX,IND 32/16 W/8D @ 4,6,12 OC
(N) FLOOR SHEATHING - 3/4"PW T&G, CDX, IND 32/16 W/ 8D @ 4,6,12 OC

DIAPHRAGM NAILING SCHEDULE 20

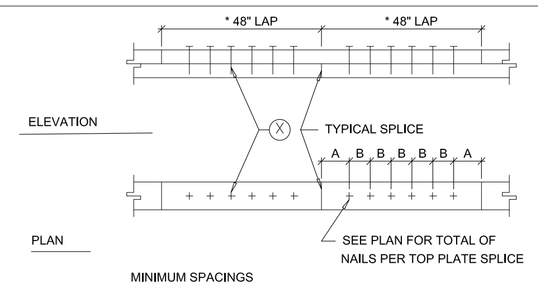

MINIMUM SPACINGS

X		A SPACING	B SPACING	PCS	LOAD
16d NAILS	**	2"	2" STAGG.	22	3000#
		2"	4" STAGG.	8	1675#
		2"	8" STAGG.	6	850#
		2"	2-16D/STUD	6	850#

* NUMBER OF NAILS MAY REQUIRE GREATER LENGTHS
** USE 16d COMMON NAILS 3-1/2" LONG ONLY
IF ELEVATION OF TOP PLATE CHANGES, THEN SEE FOR TOP > SIZE CHANGES

TOP PLATE SPLICE 19

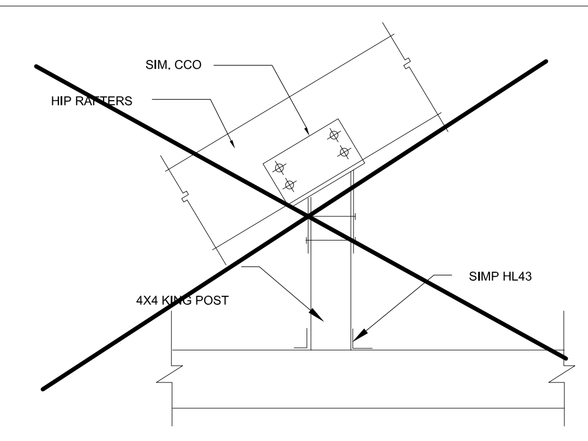

KING POST DETAIL 18

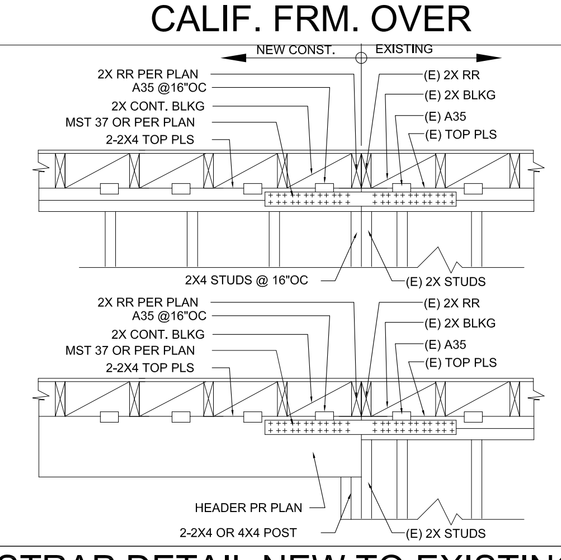

STRAP DETAIL NEW TO EXISTING 17

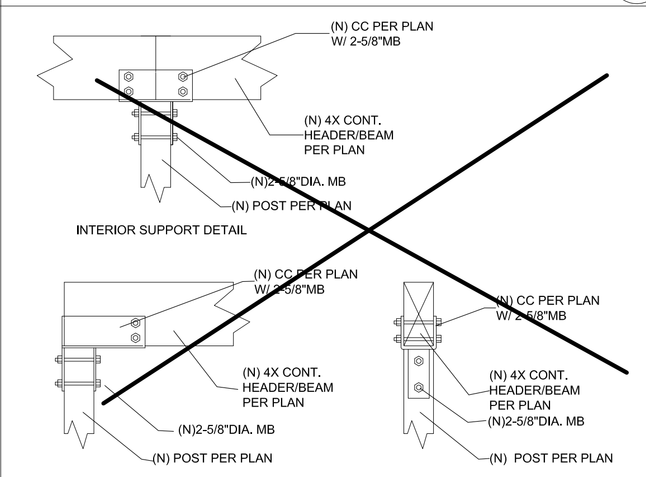

POST CAP DETAIL 16

STUDIO M+A
5608 E. PEABODY ST.
LONG BEACH, CA 90242 626-375-3073

JANE ROGERS
4014 W. 175th STREET
TORRANCE, CA.

STRUCTURAL
DETAIL

approved by

DATE
NOV. 6, 2013

DRAFTER
A. Gomez

SHEET NUMBER
A-5.2