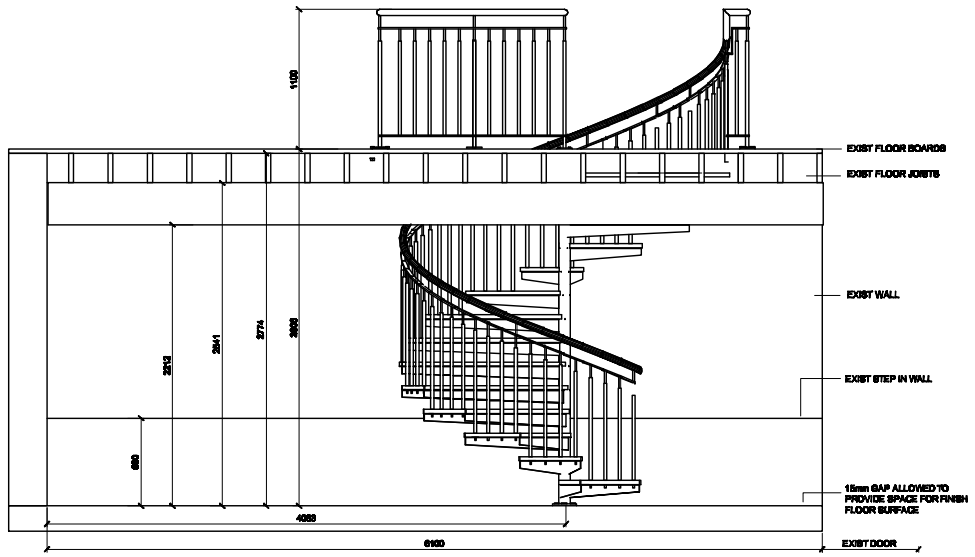

ENDELEVATION
SCALE 1:20@A0

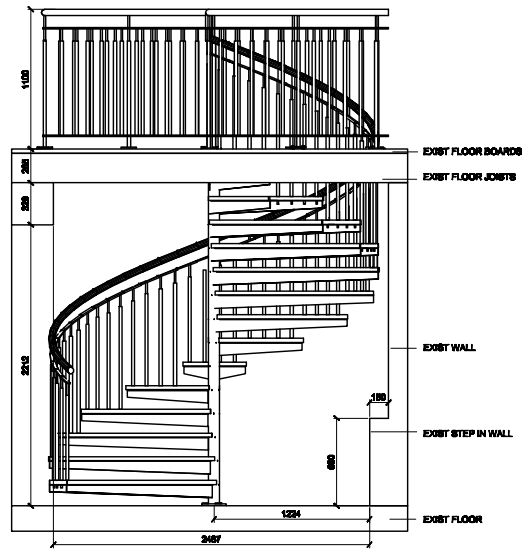

FRONT ELEVATION
SCALE 1:20@A0

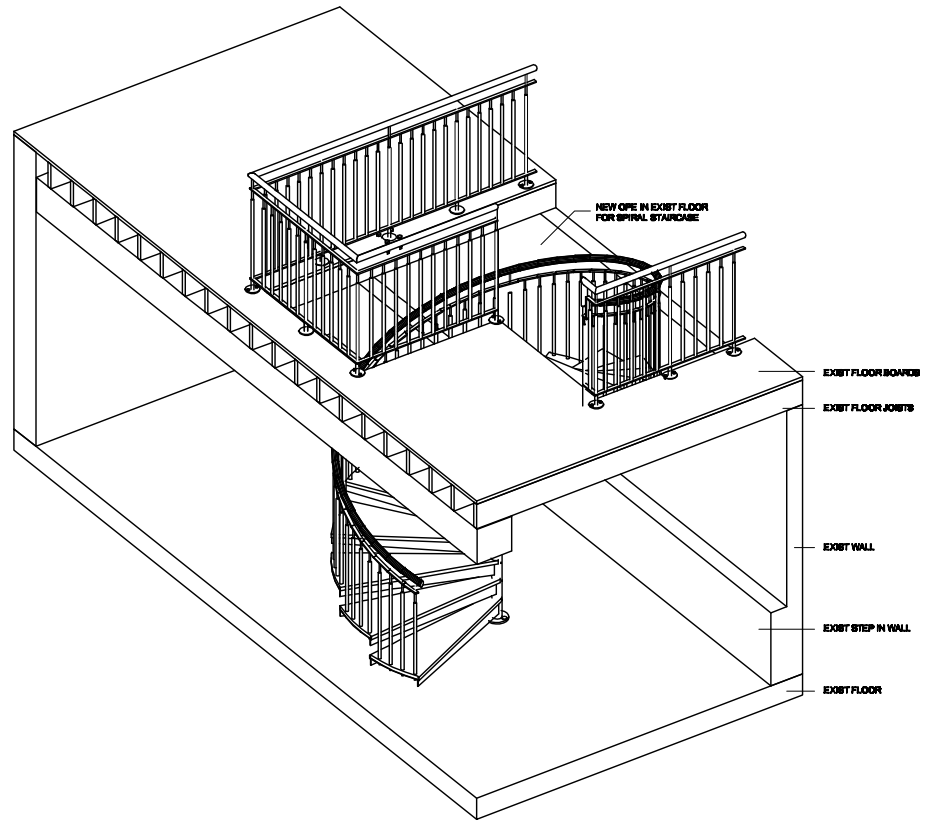

3D VIEW SHOWING ALL ELEMENTS
SCALE 1:20@A0

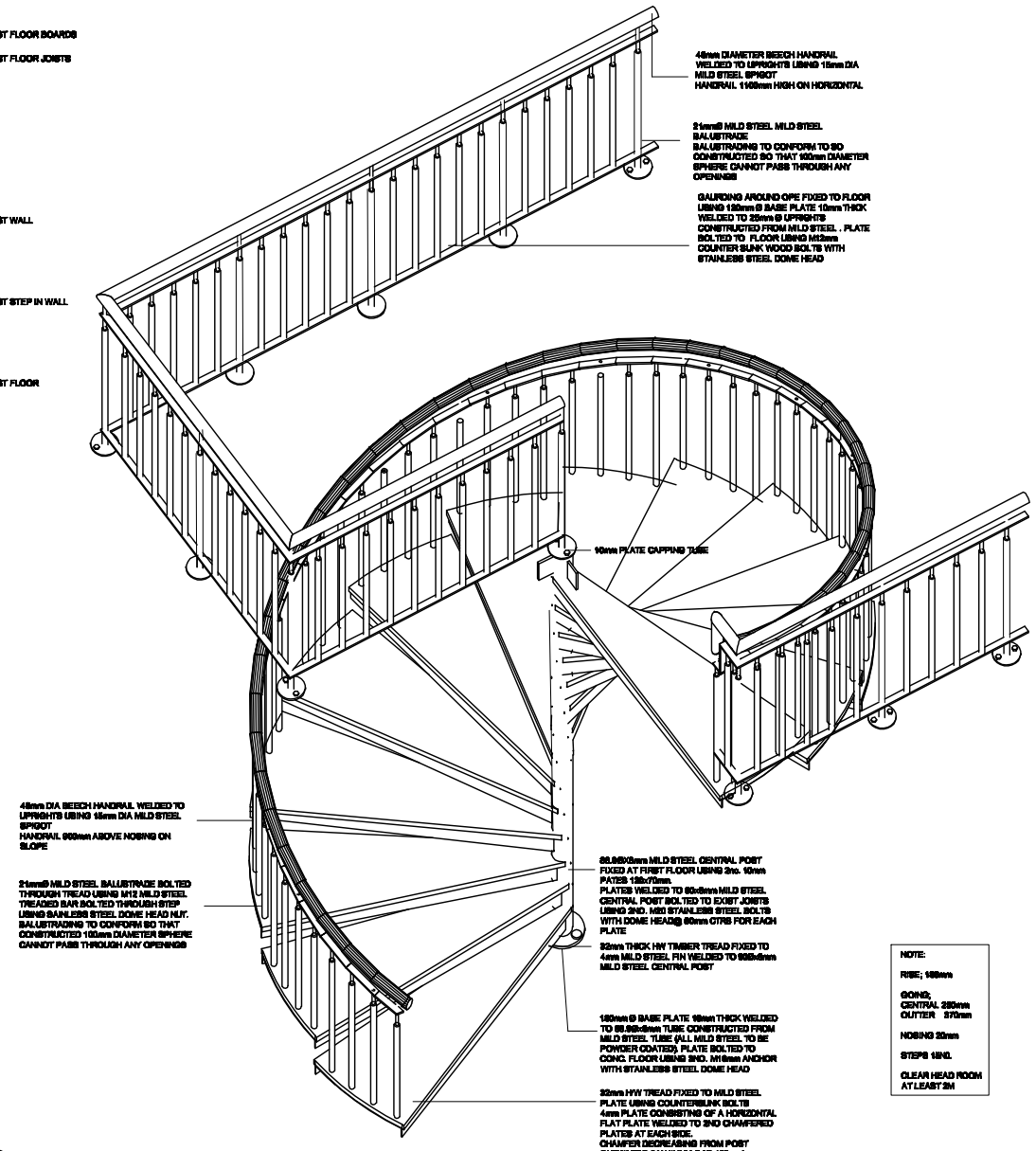

3D VIEW SHOWING SPIRAL AND HANDRAIL
SCALE 1:10@A0

NOTE:
RISE; 150mm
GOING;
CENTRAL 250mm
OUTTER 370mm
NOSING 30mm
STEPS 12NO.
CLEAR HEAD ROOM AT LEAST 2M

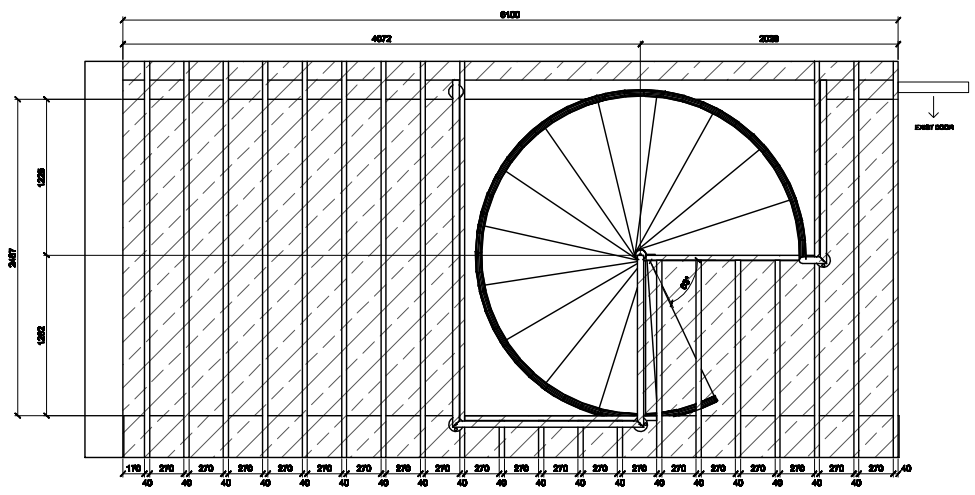

PLAN SHOWING SPIRAL POSITION & JOIST LAYOUT
SCALE 1:20@A0

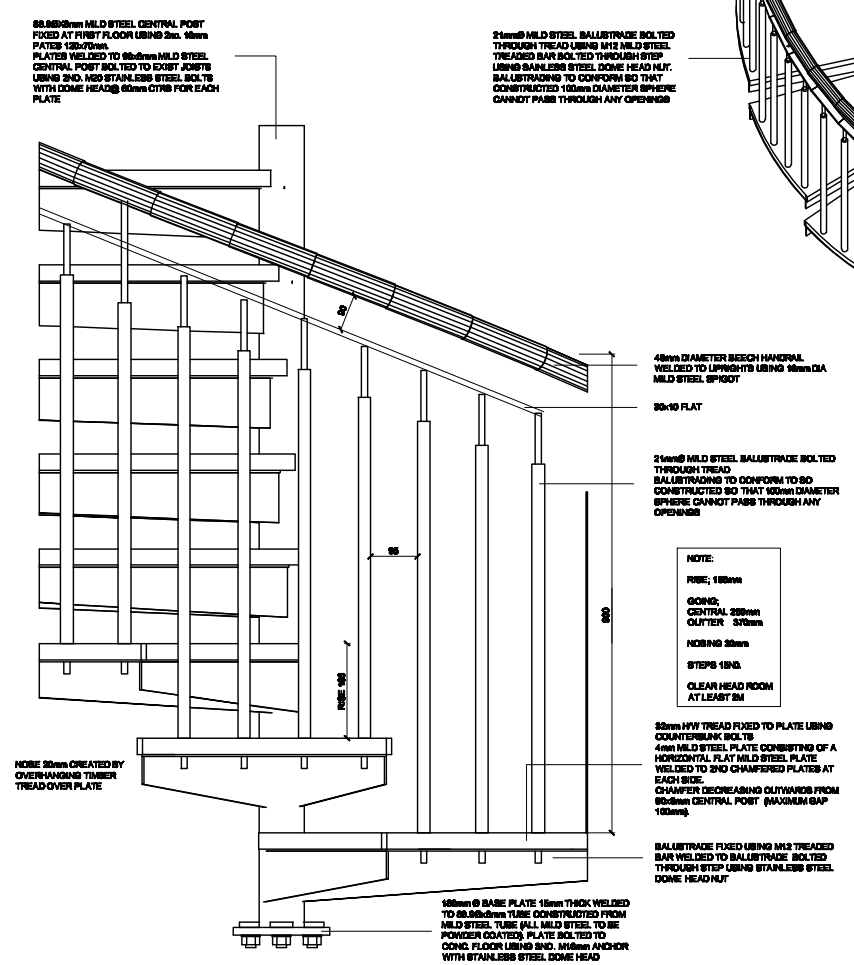

DETAIL OF HANDRAIL AND STEP
SCALE 1:5@A0

NOTE:
RISE; 150mm
GOING;
CENTRAL 250mm
OUTTER 370mm
NOSING 30mm
STEPS 12NO.
CLEAR HEAD ROOM AT LEAST 2M

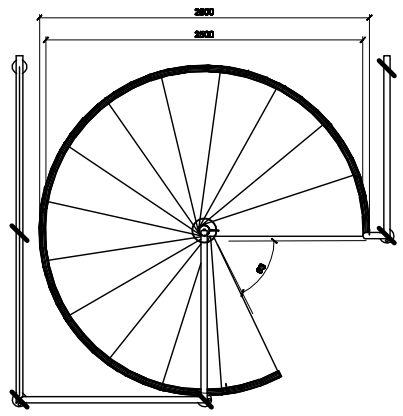

PLAN OF SPIRAL
SCALE 1:20@A0

NOTE:
RISE; 150mm
GOING;
CENTRAL 250mm
OUTTER 370mm
NOSING 30mm
STEPS 12NO.
CLEAR HEAD ROOM AT LEAST 2M

General Notes

SPIRAL STAIR

WHITE PAINTED MILD STEEL SPIRAL STAIR WITH 40mm TIMBER TREAD AND 50mm BEECH HANDRAIL.

SPIRAL STAIR SUPPORTED USING 88.9x8 MM CENTRAL POST FIXED AT TOP USING 2NO 10mm PLATES 70x120 WELDED TO POST , PLATES FIXED TO JOISTS WITH 2NO M20 BOLTS WITH STAINLESS STEEL DOME HEAD FOR PLATE
10mm PLATE WELDED TO CENTRAL POST AT TOP AT BOTTOM THE POST IS FIXED TO FLOOR USING 150mm Ø 8MM PLATE 16mm THICK WELDED TO 88Ø/8mm TUBE CONSTRUCTED FROM MILD STEEL TUBE (ALL MILD STEEL TO BE POWDER COATED). PLATE BOLTED TO CONCRETE FLOOR USING 8NO. 16mm ANCHOR WITH STAINLESS STEEL DOME HEAD

STEPS CONSIST OF 4mm HORIZONTAL PLATE WITH 2NO 30MM STAGES AT FRONT AND BACK OF STEP FOR THE 4 STEPS TO NO MORE THEN 150mm BETWEEN STEPS
PLATE FIXED TO CENTRAL POST USING 8mm CONTINUOUS FILLET WELD. 50mm COVERAGE + CONTINUOUS FOR WELD

32mm TIMBER TREAD FIXED TO PLATE USING COUNTERSUNK BOLTS. TREAD OVERHANGS 10mm FRONT AND BACK OF STEP CREATING A NOSING OF 30mm

48mm BEECH HANDRAIL FIXED TO SPIGOTS WELDED 16mm DIA MILD STEEL SPIGOT
HANDRAIL 900mm ABOVE NOSING ON SLOPE
21mmØ MILD STEEL BALUSTRADE BOLTED THROUGH TREAD USING M12 MILD STEEL TREADED BAR BOLTED THROUGH STEP USING STAINLESS STEEL DOME HEAD NUT. BALUSTRADING TO CONFORM BO THAT CONSTRUCTED 100mm DIAMETER SPHERE CANNOT PASS THROUGH ANY OPENINGS

150mm HIGH HORIZONTAL BALUSTRADING AT FIRST FLOOR CONSISTS OF 48mm DIAMETER BEECH HANDRAIL WELDED TO UPRIGHTS USING 16mm DIA MILD STEEL SPIGOT
21mmØ MILD STEEL MILD STEEL BALUSTRADE
BALUSTRADING TO CONFORM TO BO CONSTRUCTED SO THAT 100mm DIAMETER SPHERE CANNOT PASS THROUGH ANY OPENINGS

GAUGING AROUND OPE FIXED TO FLOOR USING 150mmØ BASE PLATE 16mm THICK WELDED TO 25mmØ UPRIGHTS CONSTRUCTED FROM MILD STEEL. PLATE BOLTED TO CONCRETE FLOOR USING M12mm COUNTER SUNK WOOD BOLTS WITH STAINLESS STEEL DOME HEAD

THIS DRAWING MUST NOT BE SCALED

SPIRAL STAIRCASE TO CONFIRM TO BS 5395 PART 2 TYPE E PUBLIC STAIR

STEEL WHITE PAINTED SPIRAL STAIRCASE WITH HW TIMBER TREADS AND BEECH HANDRAIL TO REACH SLAB TO FLOOR MADE BY SPECIALIST FIRM FIXED TO GROUND SLAB.

ALL DIMENSIONS TO BE CHECKED AND VERIFIED ON SITE

ALL STAINLESS STEEL SATIN FINISHED GRADE 304

ALL MILD STEEL TO BE PAINTED WHITE INCLUDE FOR ALL NECESSARY BASEPLATES, SECONDARY FIXINGS AND WELDING AS PER ARCHITECTS DRAWINGS AND PERFORMANCE SPECIFICATIONS

ALL WELDS CONSIST OF 6mm FILLET WELD

NOTE:

RISE; 150mm

GOING;
CENTRAL 250mm
OUTTER 370mm

NOSING 30mm

STEPS 12NO.

CLEAR HEAD ROOM AT LEAST 2M

SPIRAL DIA INSIDE HANDRAIL 2600mm

CLIENT	FLOOD IRONWORKS LTD
PROJECT	PIERCE GRAIN STORE
DRAWING TITLE	PAUL QUAY SPIRAL STAIR
DRAWN BY	A. BRENNAN
CHECKED BY	
DATE	04/04/2023
SCALE	As Noted
PROJECT No.	
DRAWING No.	[illegible]
REV	C