1st run	2nd run	End leg	Middle
61 1/4	64 1/2	23	12 3/4

Total stock needed in feet 11 53/58 feet

Number of stock ordered #2 Length 6 feet
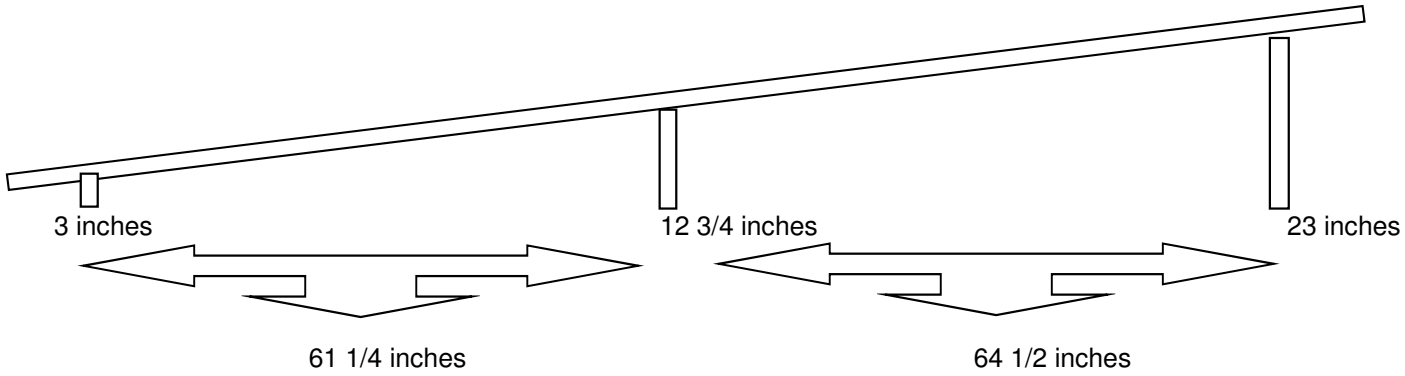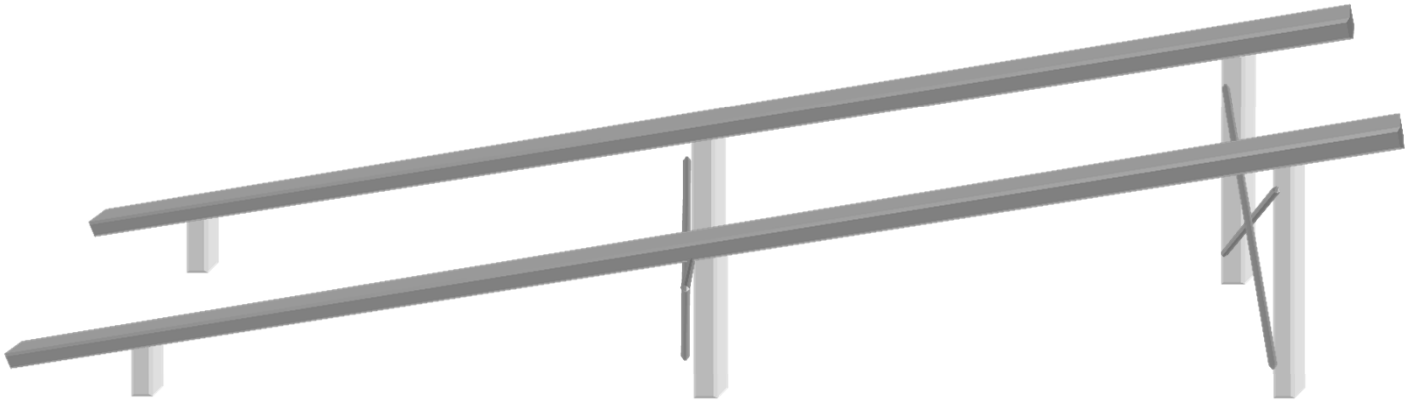
Stock availability with minimum cuts (3) 11.9375