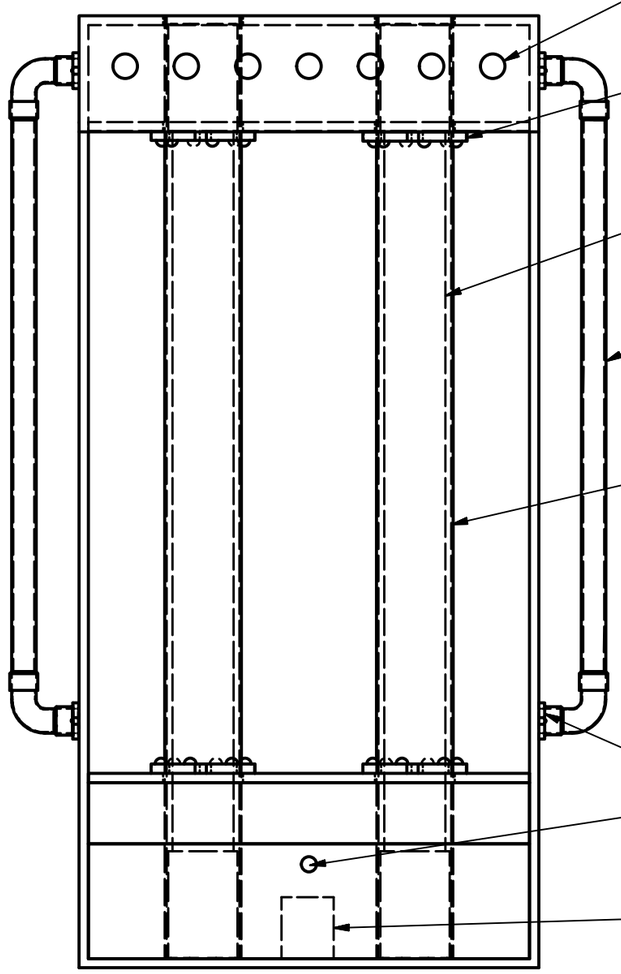

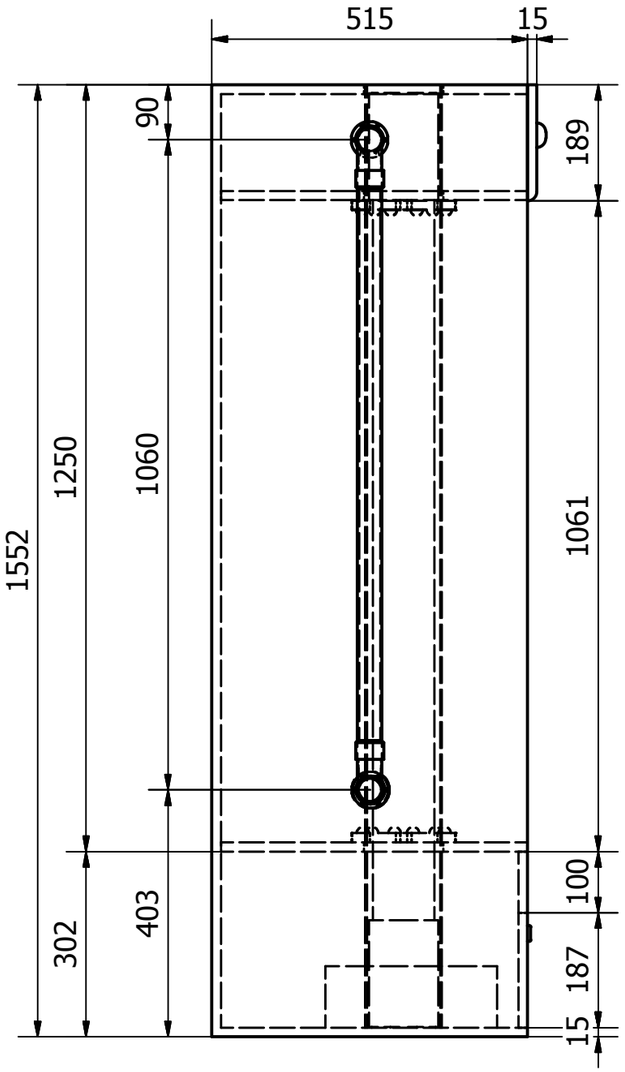

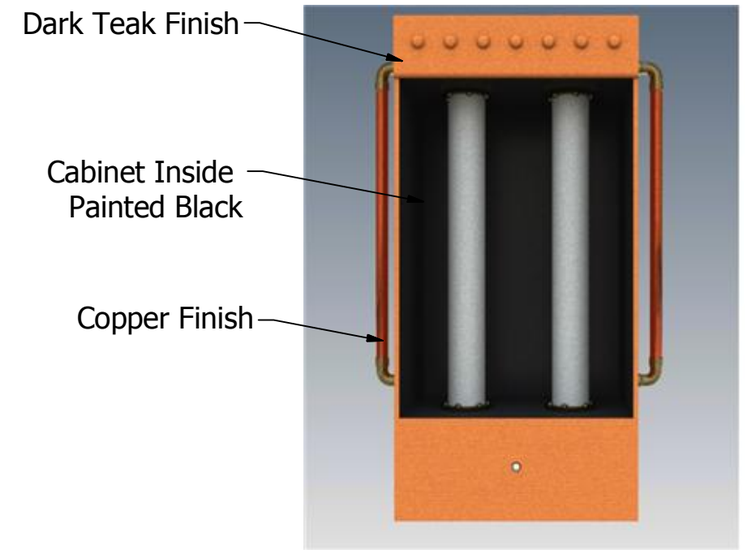

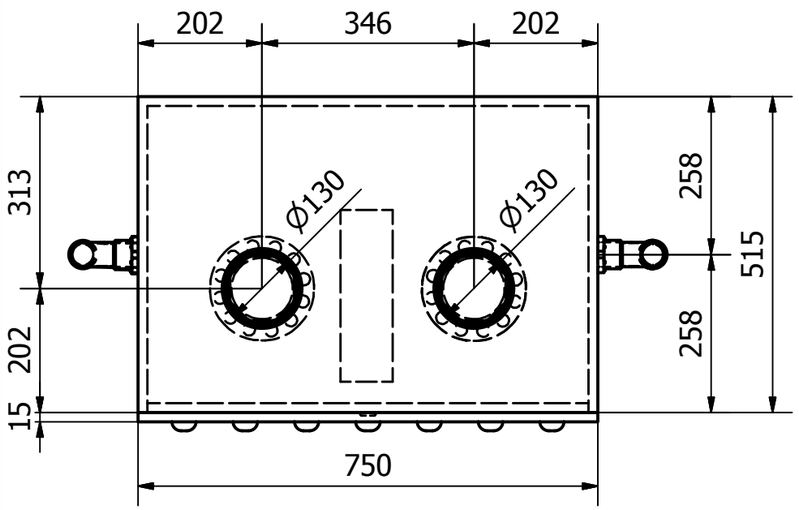

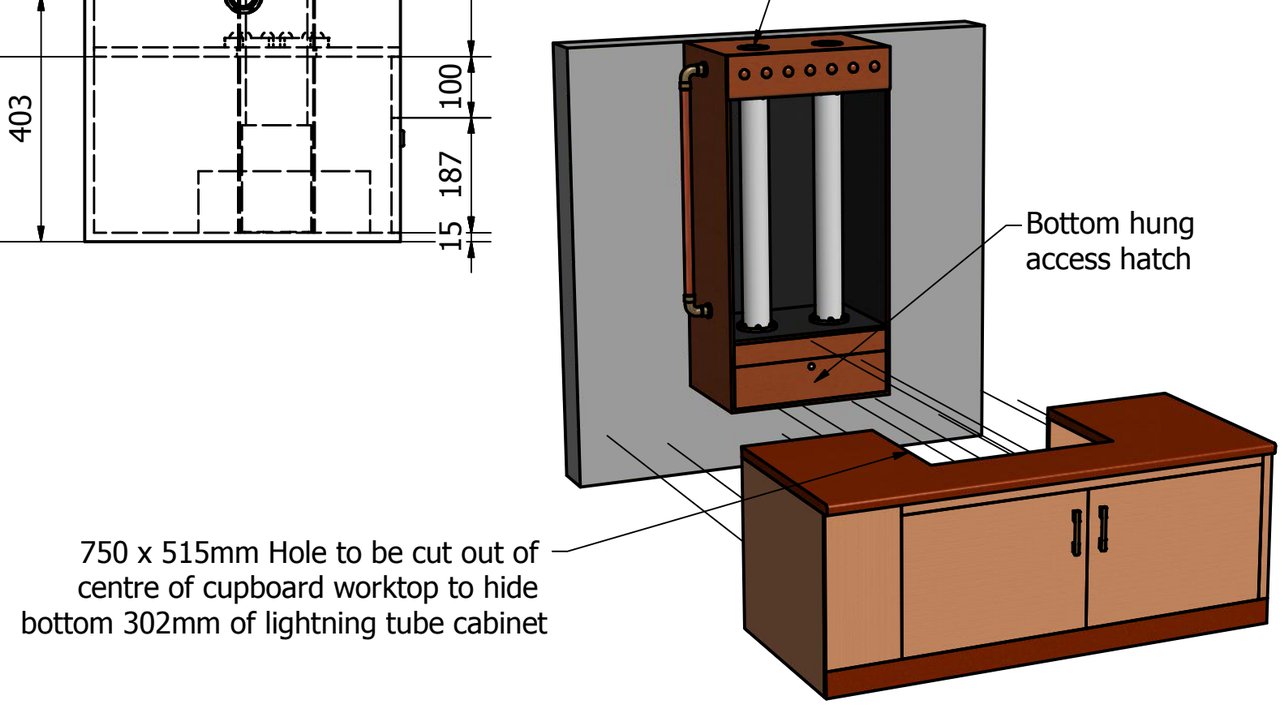

Designed by	Checked by	Approved by	Date		Date	
RichardJude					14/02/2014	

kddecoratives
a blachere group company

02CD-070

Lightning Tube Cabinet

Edition

Sheet 1 / 1