Recipe for the Perfect Marshmallow Cannon

Matthew Kanno
PD 410

1) 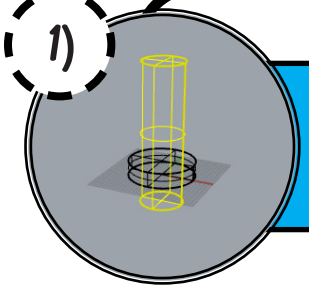

Start with two cylinders, with one intersecting the other

2) 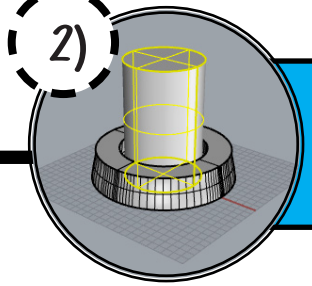

Boolean the two cylinders, while also evening their ground level

3) 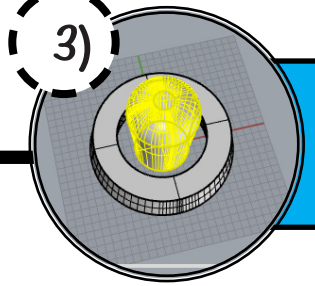

Taper & fillet the intersecting cylinder so it looks like a light bulb

4) 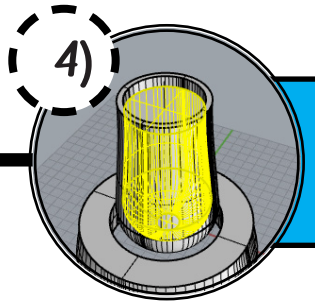

Remove the inside of the cylinder by booleaning or offsetting

5) 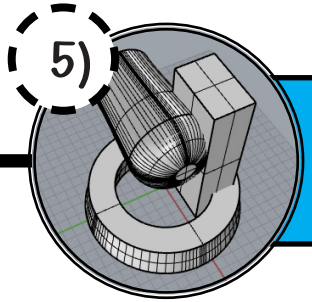

Rotate your cannon, then extrude a rectangle that intersects with your cannon

6) 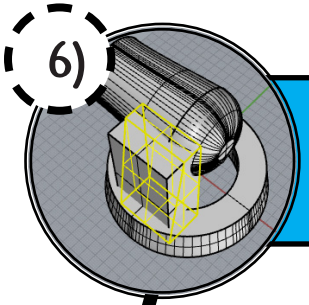

Use the polyline tool to draw out & extrude a triangle in the rectangle

7) 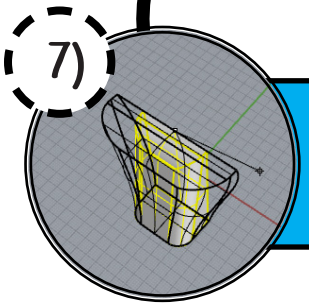

Fillet your triangle, then taper it. Lastly, use the bend tool to fit your cannon

8) 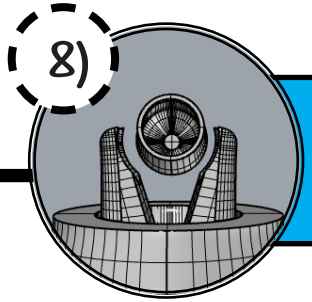

Create a mirror of your "triangle." Then boolean both with your cannon.

9) 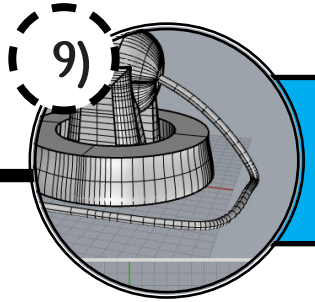

Draw a curved line from the back of the cannon then use the pipe tool

10) 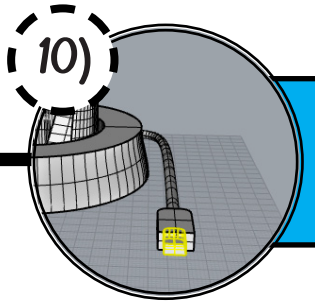

Draw a rectangle for the USB pin. Copy it & then offset & trim the copy.

11) 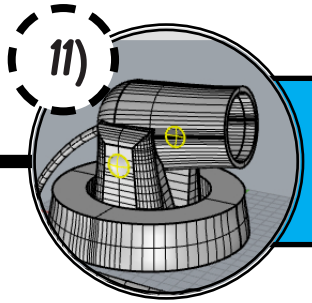

Draw two ellipses that petrude from the cannon neck for bolts.

12) 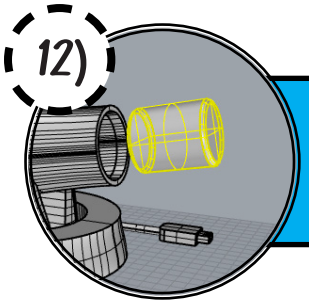

Finally, make a cylinder for a marshmallow. Then fillet edges that need softness.