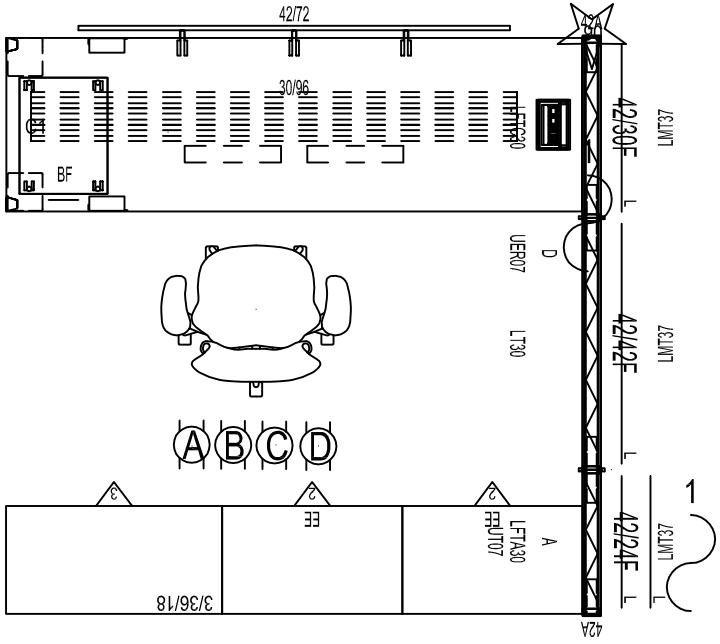
42/72
42A
30/96
LFT080
BF
42/30F
LMT37
D
UER07
LT080
42/42F
LMT37
A B C D
1
3
2
2
EE
LFTA30
FFUT07
A
LMT37
42/24F
3/36/18
42A

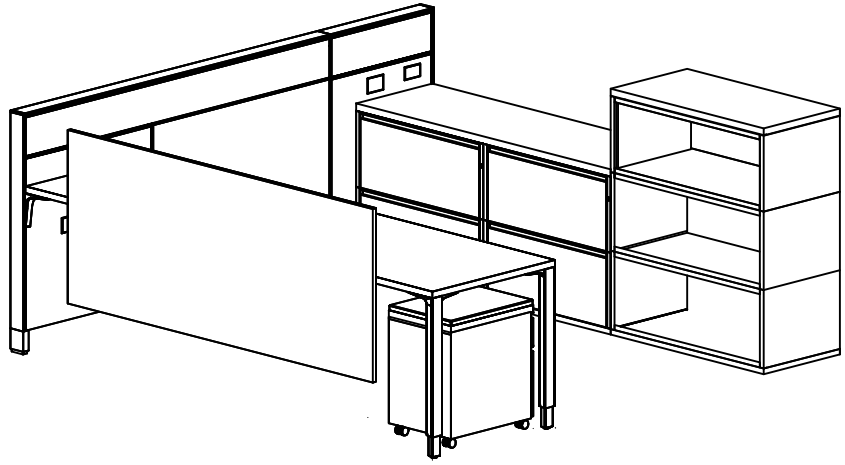

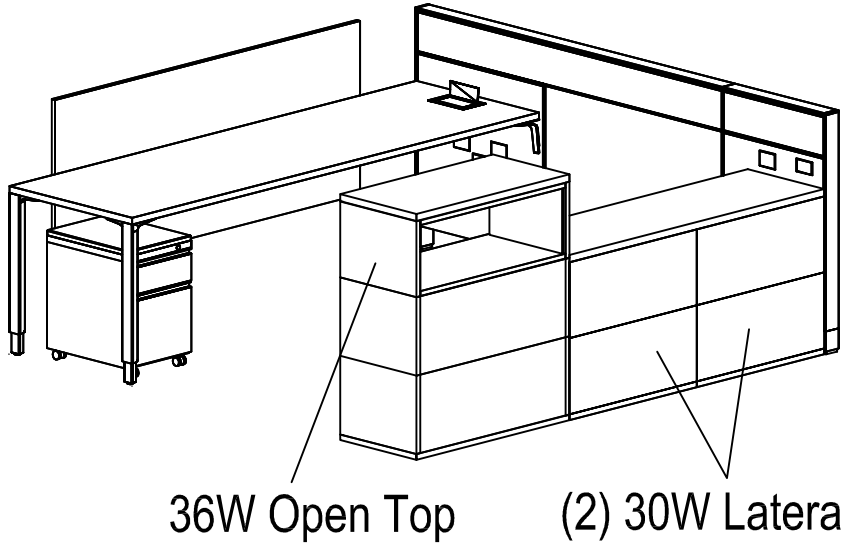
36W Open Top
(2) 30W Laterals