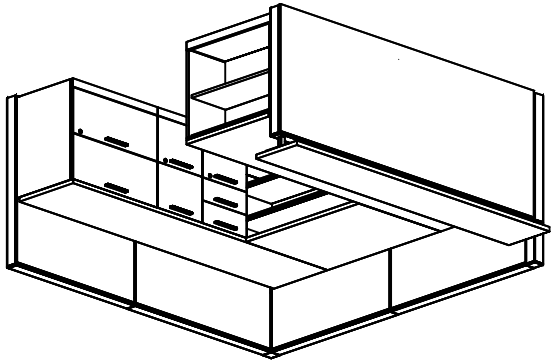

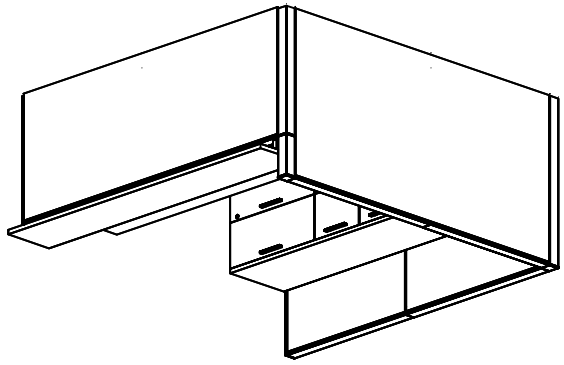

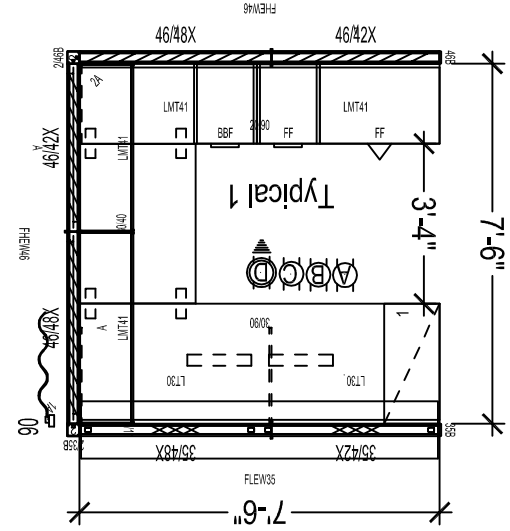
7'-6"
FLEW35
35/42X
35/48X
2/46B
46/48X
46/42X
FHEM46
46/42X
46/48X
06
LT30
LT30
LMT41
LMT41
LMT41
50/90
A
1
A B C D
Typical 1
3'-4"
7'-6"
04/40
2/46
BBF
20/90
FF
FF
LMT41
2/46