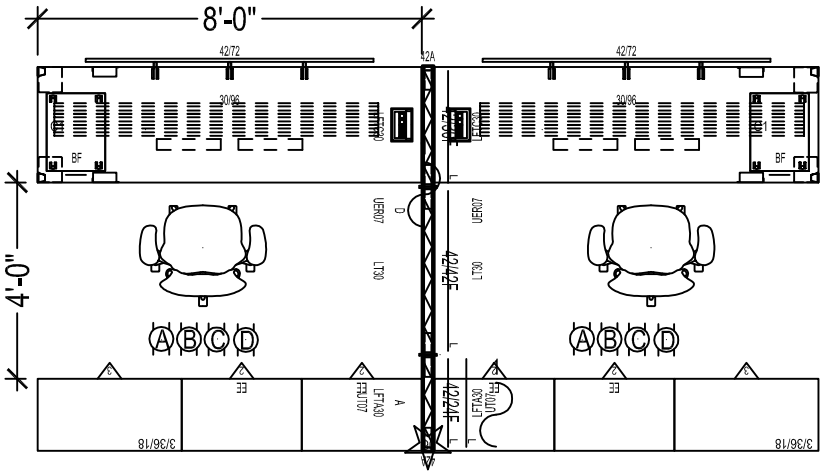
8'-0"
4'-0"
42/72
30/96
BF
UER07
LT30
LFTA30
LFTA07
UT07
EE
3/36/18
A
B
C
D

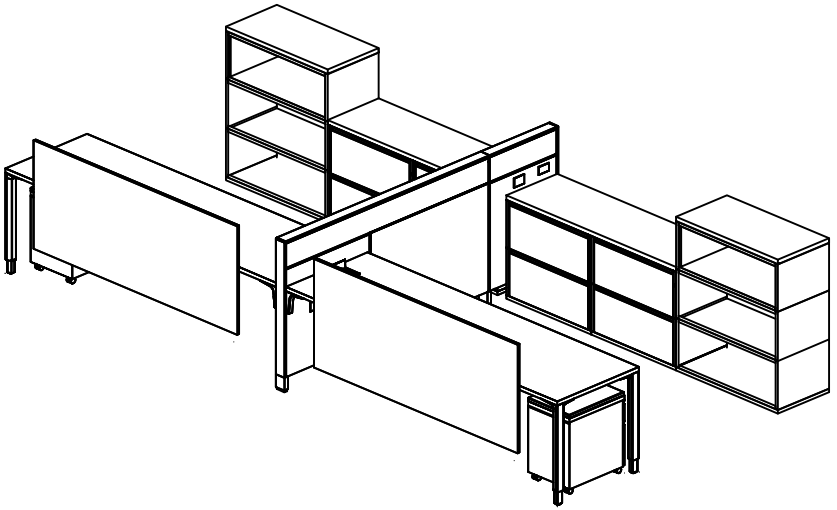

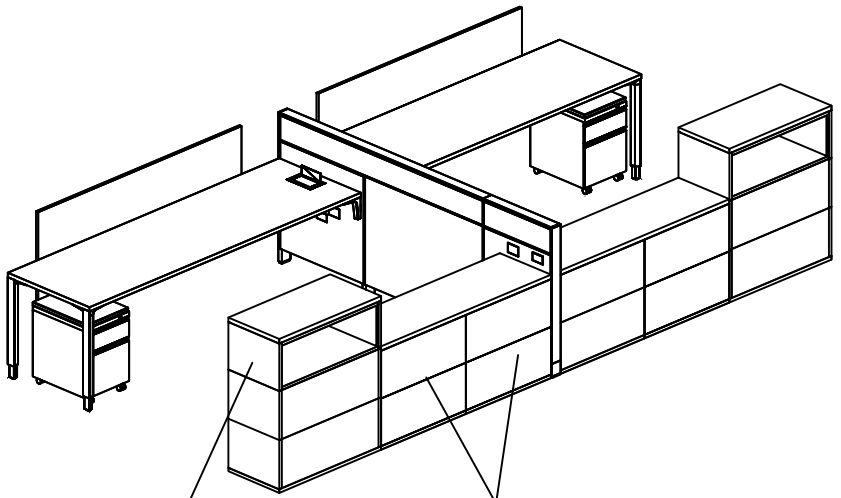
36W Open Top
(2) 30W Laterals