Fitting Room Desk "A"

Preliminary for pricing only

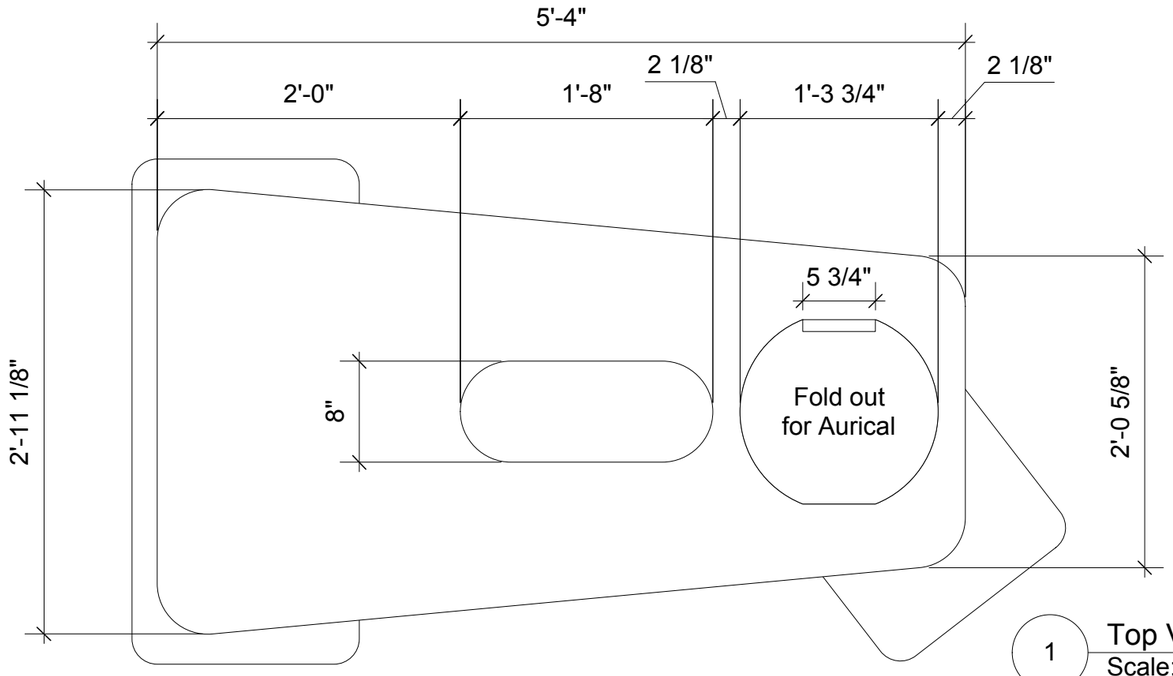

1 Top View
Scale: 1" = 1'-0"

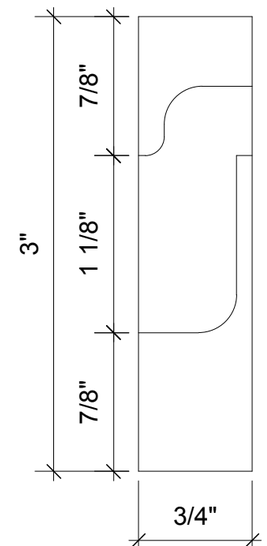

3 Inset Handle Detail
Scale: Actual Size

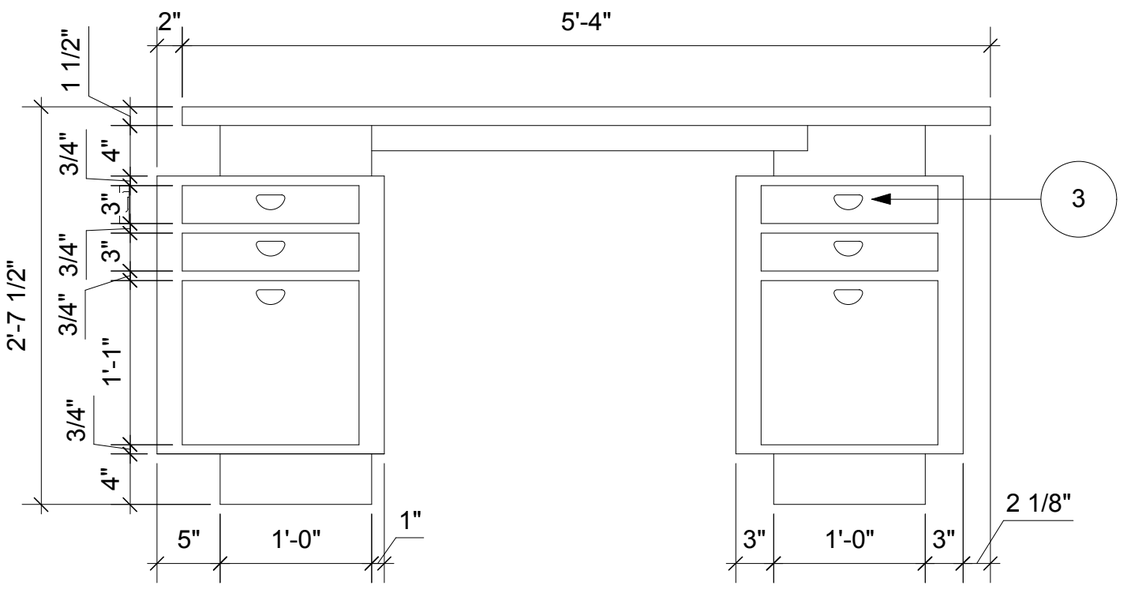

2 Front View
Scale: 1" = 1'-0"

4 Perspective View

Upland, CA - A2 Store

Connect Hearing
YOUR HEARING PROFESSIONALS

EXPOTECHNIK
Exhibitions Events Environments