2015-01-13

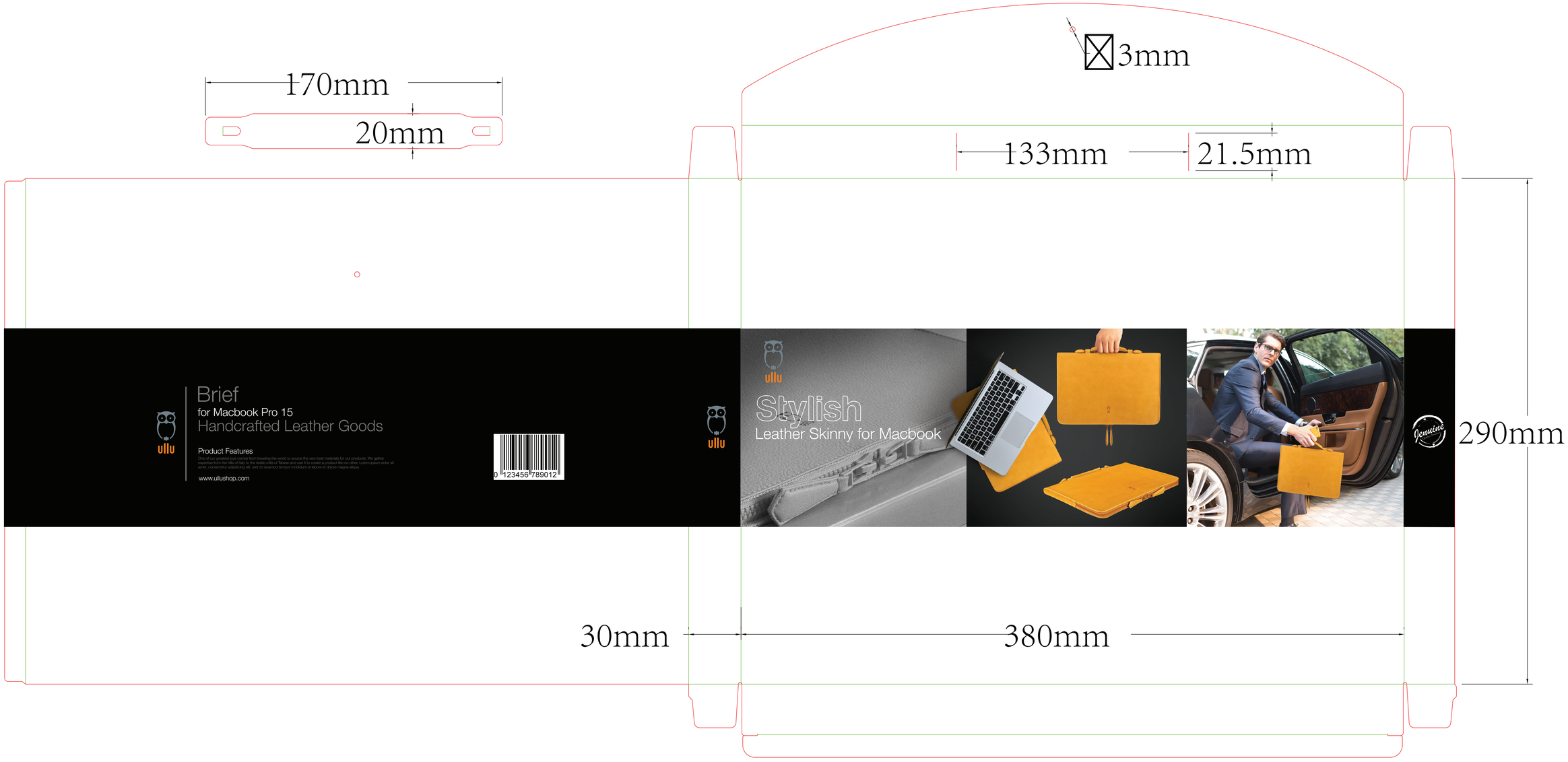
170mm
20mm
3mm
133mm
21.5mm
290mm
30mm
380mm
Brief
for Macbook Pro 15
Handcrafted Leather Goods
Product Features
One of our greatest joys comes from traveling the world to source the very best materials for our products. We gather expertise from the hills of Italy to the textile mills of Taiwan and use it to create a product like no other. Lorem ipsum dolor sit amet, consectetur adipiscing elit, sed do eiusmod tempor incididunt ut labore et dolore magna aliqua.
www.ullushop.com
0 123456 789012
ullu
Stylish
Leather Skinny for Macbook
Genuine