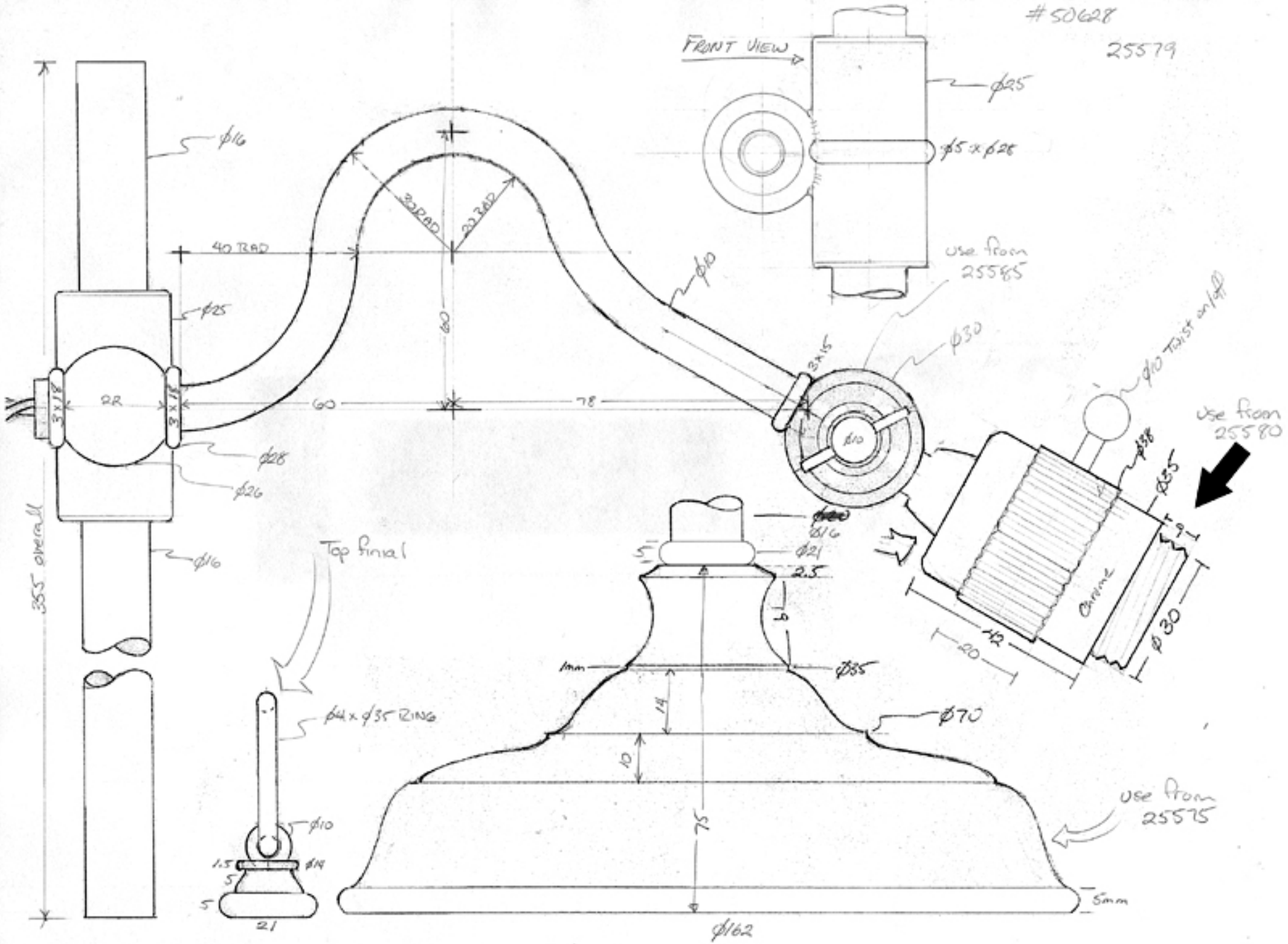
#50628
25579
FRONT VIEW
ϕ25
ϕ5 x ϕ28
ϕ16
ϕ25
ϕ28
ϕ26
ϕ16
355 overall
40 RAD
30 RAD
20 RAD
60
60
78
3x18
3x18
2R
ϕ10
ϕ30
3x15
ϕ10
use from 25585
ϕ10 Twist on/off
use from 25580
ϕ38
ϕ35
Chrome
ϕ30
42
20
ϕ16
ϕ21
2.5
1mm
ϕ35
14
10
75
ϕ70
use from 25575
5mm
ϕ162
Top final
ϕ4 x ϕ35 RING
ϕ10
1.5
ϕ14
5
5
21