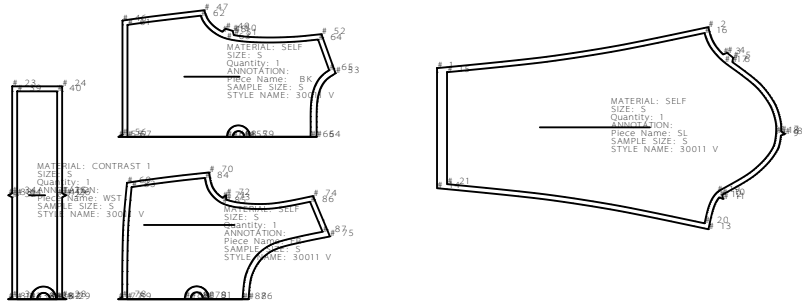

CREATION TIME: 22:13
CREATION DATE: 27 - March - 2018
FORMAT: .DXF
VERSION: R9
SOFTWARE: TechCAD
AUTHOR: SoftFashion Inc.
SAMPLE SIZE TABLE: 30011
UNITS: INCH
STYLE NAME: 30011 V