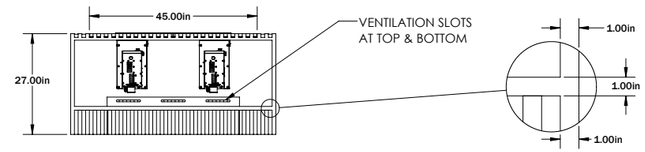

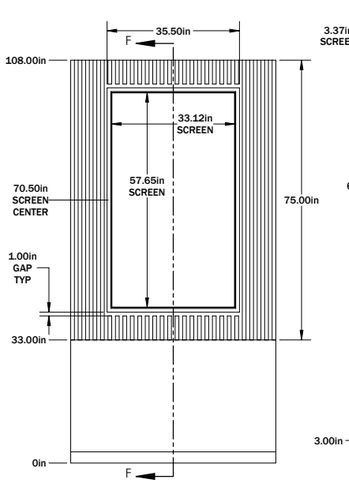

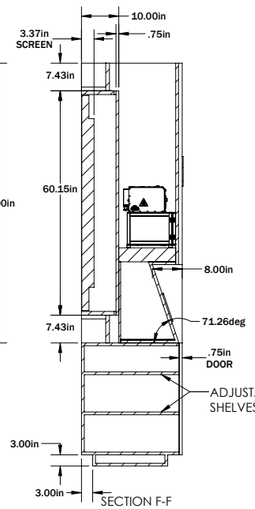

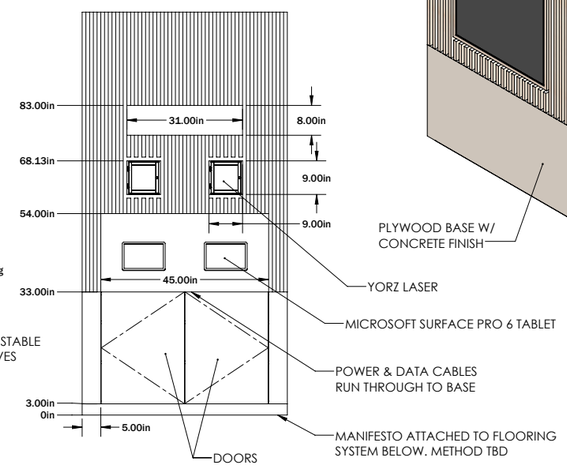

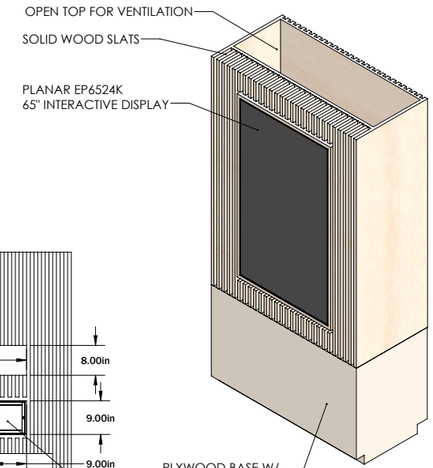

RETAIL TABLE W/ TOUCHSCREEN:

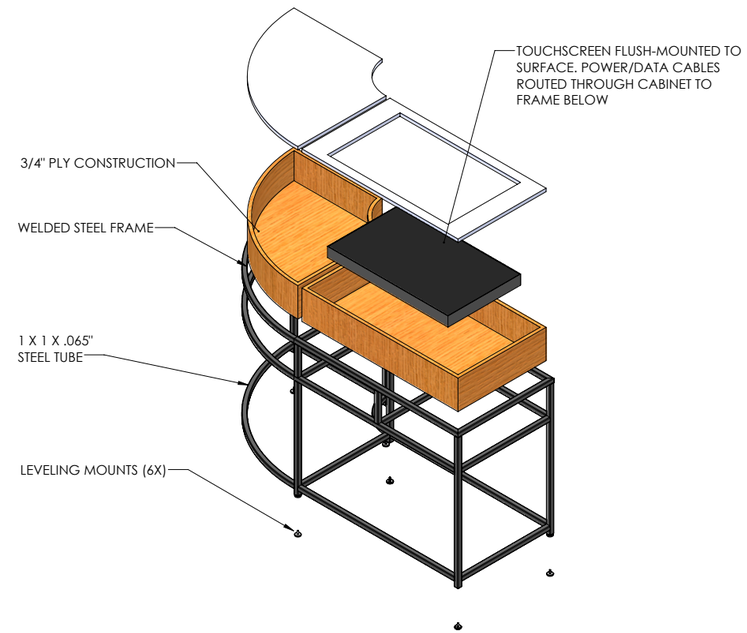
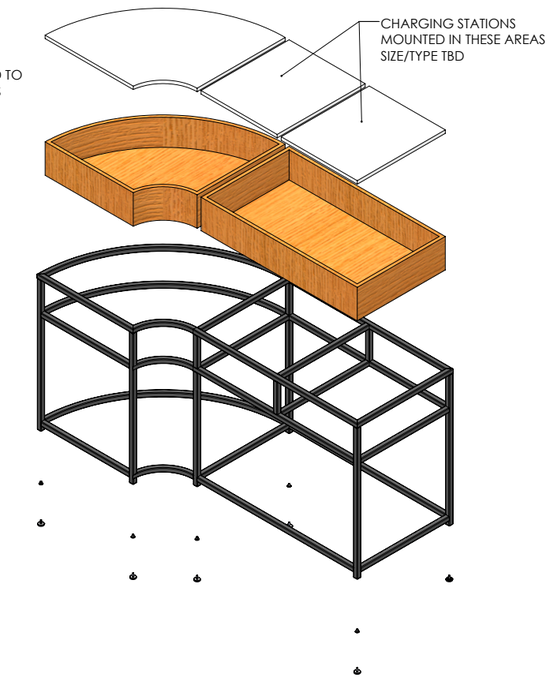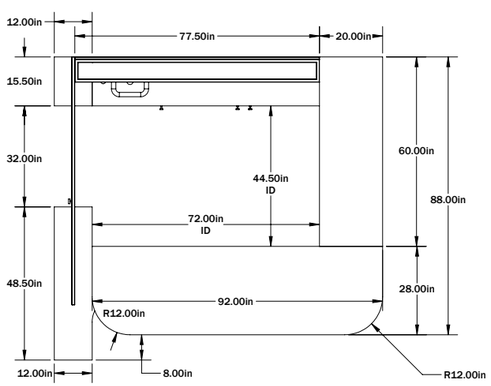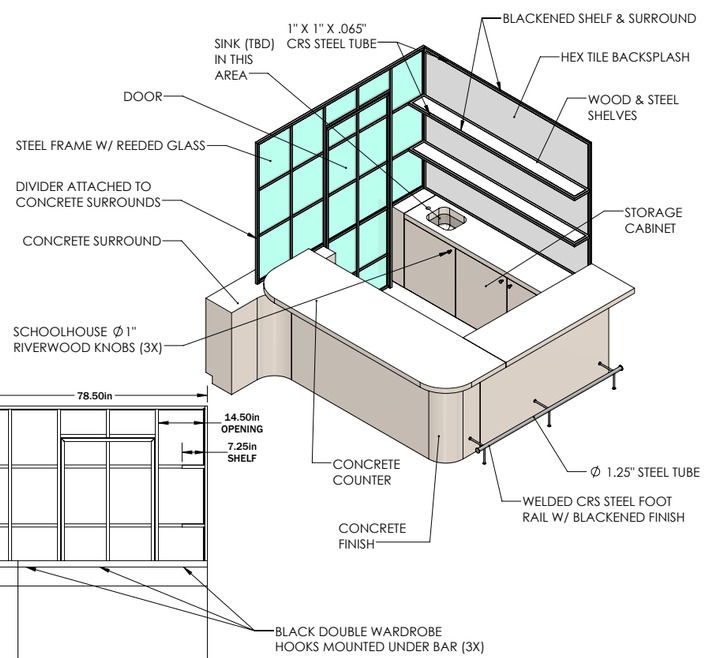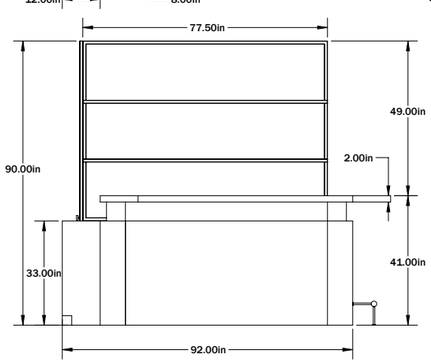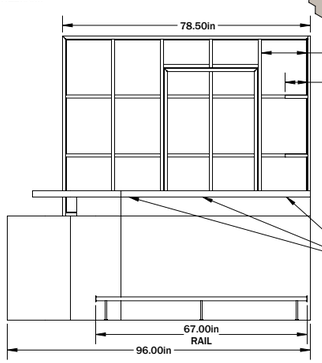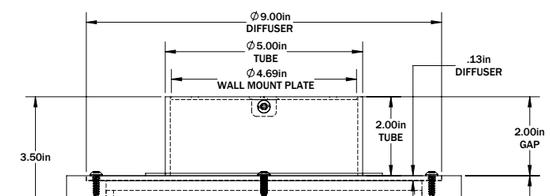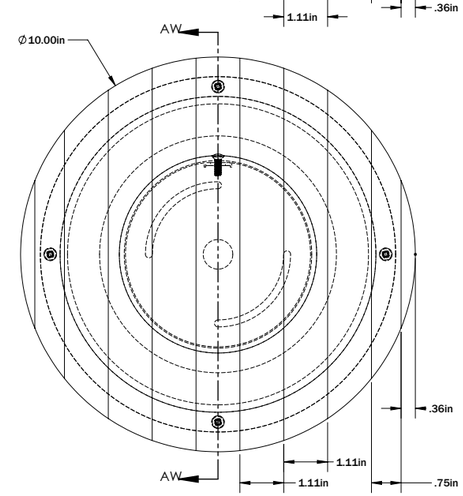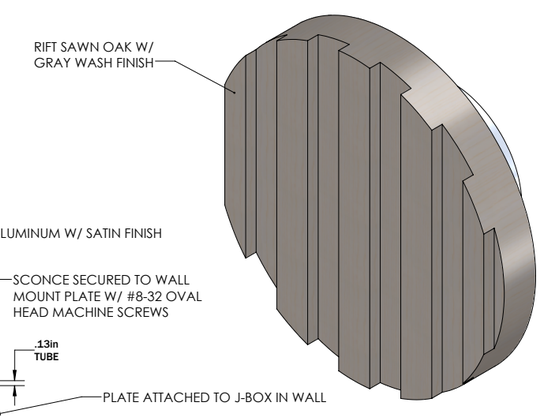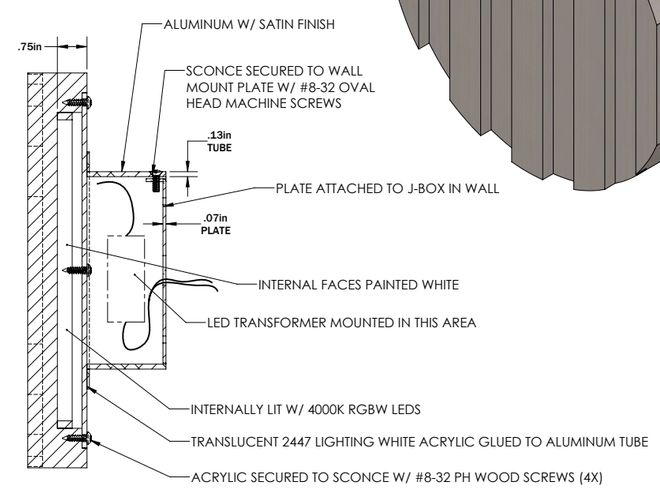
RETAIL TABLE W/ CHARGING STATION: