Stitching

Topstitch: ISO 301, 8-10 SPI
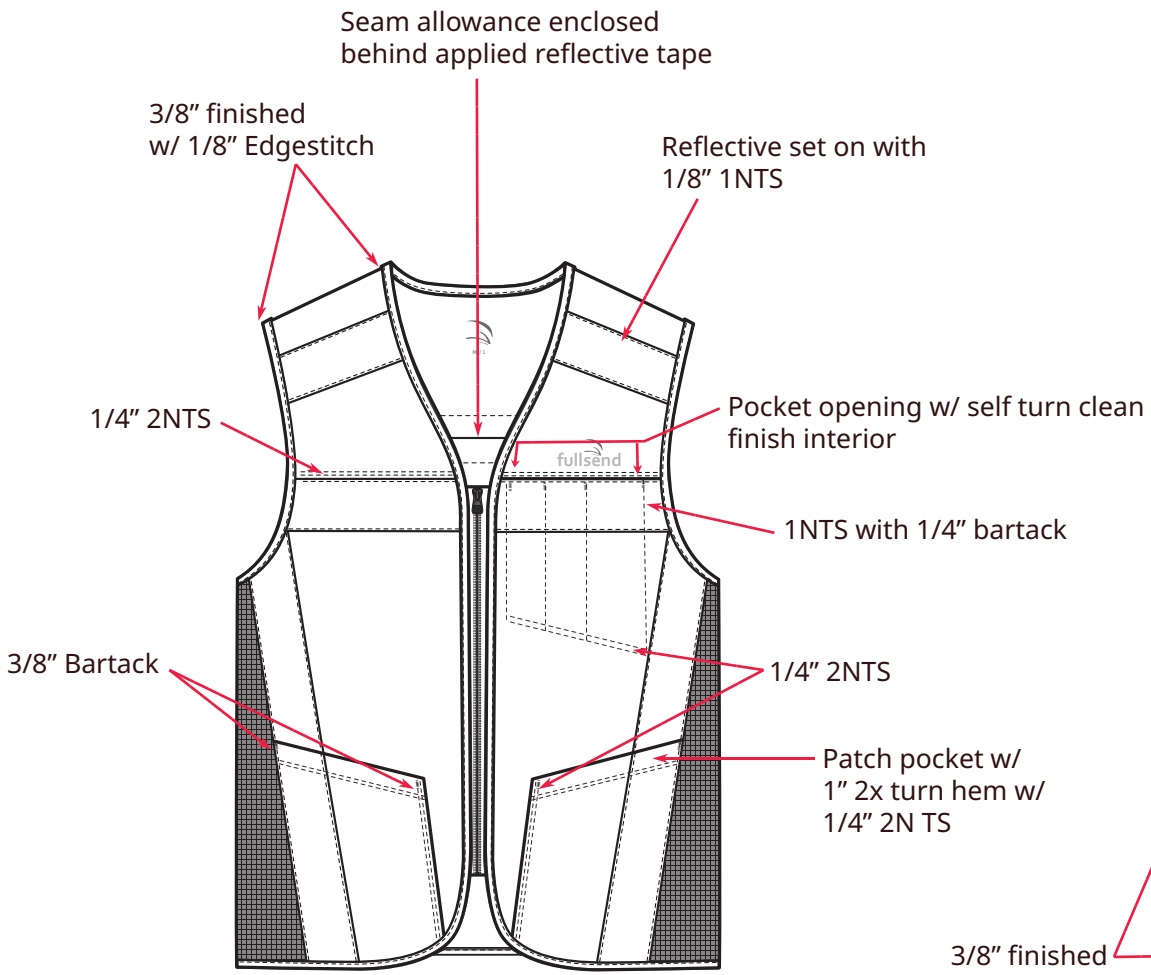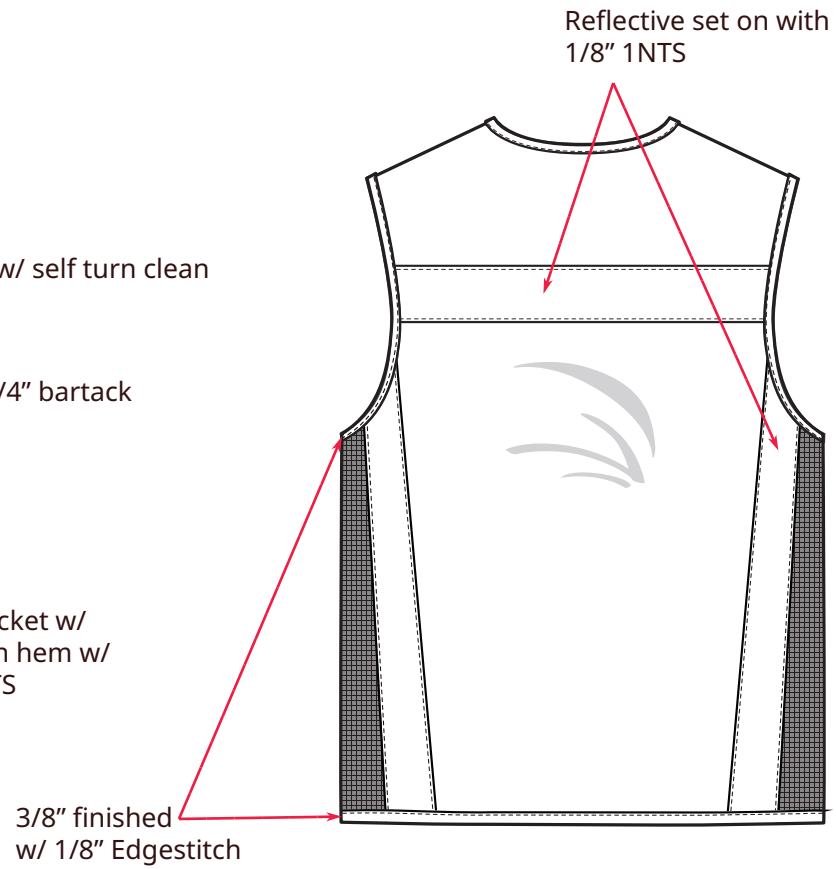
Join seams: ISO 504, 10-12 SPI