SITE PLAN

CUSTOMER APPROVAL

Customer Signature _____ Date _____

SIGNAGE SPECIFICATIONS

A **DF HALO LIT CHANNEL LETTERS BLADE SIGN**
Manufacture and Install (1) Channel Letters

SIGN ORDINANCE:

The UDC recommends that signage not exceed fifty (50) square feet (including both signage faces) and that signage indirect illumination (or illumination that does not produce a glow – often applicants proposed metal faces or back lighting).

COAST SIGN
1500 W. Embassy St. Anaheim, CA 92802 714.520.9144

Date: 03-22-21	Project Name: SUBWAY
Scale: NTS	Address: 111 East Soledad Street
Drawn: Teland A.	City / State / Zip: San Antonio, TX
PM: Brenda H.	Notes:

This is an original unpublished drawing created by Coast Sign, Inc. It is submitted for your personal use in conjunction with a project being planned for you by Coast Sign, Inc., And shall not be reproduced, used by or disclosed to any firm or corporation for any purpose whatsoever without written permission.

No.	Designer	Date	Revision Notes	No.	Designer	Date	Revision Notes
1				7			
2				8			
3				9			
4				10			
5				11			
6				12			

DESIGN DRAWING 1 of 3

Request Number:

DEV-HOSP-00004

EXISTING PHOTO- SIGN A

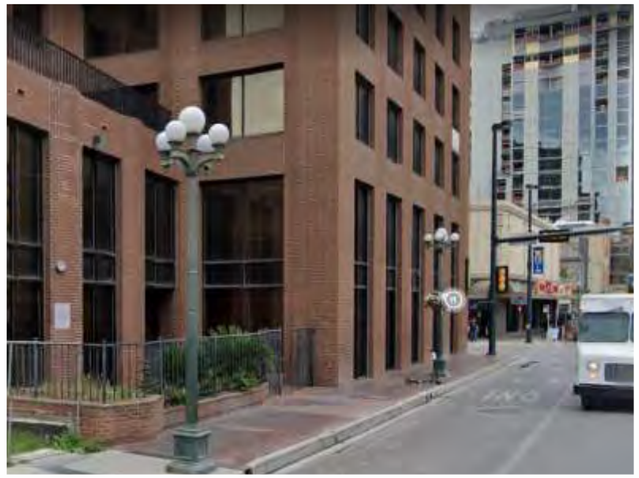

PHOTO ENHANCEMENT- SIGN A

CUSTOMER APPROVAL

Customer Signature _____ Date _____

COAST SIGN

1500 W. Embassy St. Anaheim, CA 92802 714.520.9144

Date: 03-22-21	Project Name: SUBWAY
Scale: NTS	Address: 111 East Soledad Street
Drawn: Teland A.	City / State / Zip: San Antonio, TX
PM: Brenda H.	Notes:

This is an original unpublished drawing created by Coast Sign, Inc. It is submitted for your personal use in conjunction with a project being planned for you by Coast Sign, Inc., And shall not be reproduced, used by or disclosed to any firm or corporation for any purpose whatsoever without written permission.

No.	Designer	Date	Revision Notes	No.	Designer	Date	Revision Notes
1				7			
2				8			
3				9			
4				10			
5				11			
6				12			

DESIGN DRAWING 2 of 3

Request Number:

DEV-HOSP-00004

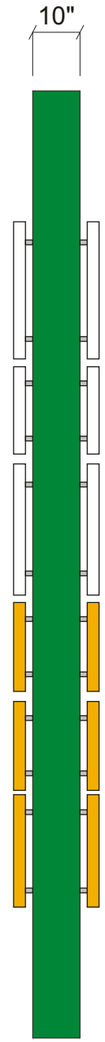

SIDEVIEW

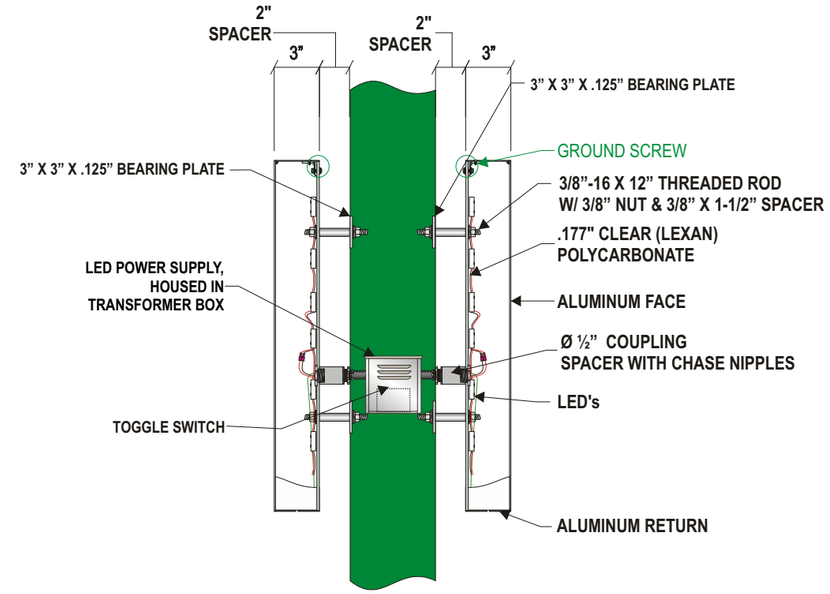

TYPICAL SECTION DETAIL
NTS

NOTE: SIGN MUST BE APPROVED BY DRC and CERTIFICATE OF APPROPRIATNESS

EXACT MANUFACTURING SPECIFICATIONS TO BE DETERMINED BY ENGINEERING DEPT.

(A) FRONT VIEW @ 16'-6" OAH X 3'-0" CABINET WITH HALO LIT ALUMINUM CHANNEL LETTERS

SCALE: 3/8" = 1'-0"

50 SQ. FT.

NOTE: ALL DIMENSIONS AND CONDITIONS MUST BE FIELD VERIFIED PRIOR TO MANUFACTURE

SPECIFICATIONS:

10" DEEP CABINET PAINTED WITH PMS GREEN 2426C.
3" DEEP ALUMINUM CHANNEL LETTERS PAINTED YELLOW PMS 7548C AND WHITE FOR HALO LIT.

CUSTOMER APPROVAL

Customer Signature _____ Date _____

COAST SIGN
1500 W. Embassy St. Anaheim, CA 92802 714.520.9144

Date: 03-22-21	Project Name: SUBWAY
Scale: NTS	Address: 111 East Soledad Street
Drawn: Teland A.	City / State / Zip: San Antonio, TX
PM: Brenda H.	Notes:

This is an original unpublished drawing created by Coast Sign, Inc. It is submitted for your personal use in conjunction with a project being planned for you by Coast Sign, Inc., And shall not be reproduced, used by or disclosed to any firm or corporation for any purpose whatsoever without written permission.

No.	Designer	Date	Revision Notes	No.	Designer	Date	Revision Notes
1				7			
2				8			
3				9			
4				10			
5				11			
6				12			

DESIGN DRAWING 3 of 3

Request Number:

DEV-HOSP-00004